Audio Watermarking Technique against attacks

Sarita Firke[1], Prof. Gayatri Pandi(Jain)[2].

[1]Student (*Master of Engineering*), *Computer Engineering*, L.J. Institute of Engineering and Technology , *Gujarat, India.*
[2] *H.O.D.PG Departments, Computer Engineering, L.J. Institute of Engineering and Technology , Gujarat, India.*

ABSTRACT

With the increasing usage of digital multimedia, protecting the data from illegal copyright infringement, fingerprinting and other malicious attacks is also increasing. Digital watermarking is a technique which provide protection of digital information against illegitimate exploitations and allocation. Digital audio watermarking technique is a process of embedding perceptually transparent digital information into the original host signal without affecting the signal quality. Watermarking techniques can be applied on various multimedia data such as text, audio, images and video for various application. In this paper we present various methods of audio watermarking techniques and also proposed work. We propose an effective audio watermarking algorithm that is based on the DWT and SVD. The DWT transform decomposes the audio signal into several multi-resolution sub bands for embedding the watermark bits. The watermark bits are embedded in the high-resolution sub bands of the audio signal.

Keyword:-*Audio watermarking, Copyright Protection, Discrete wavelet transform, Singular value decomposition, Robustness*

---

1. INTRODUCTION

The development and growth of the internet in the past years has rapidly increased the availability of digital data such as audio, images, text and videos to the public. Thus, the problem of protecting multimedia information becomes more and more important. So the solution of this problem is Digital Watermarking, which is the most common and possibly strongest technique for protecting digital data[7].Digital watermarking is used for, content authentication, tamper detection, content protection, copyright management. Protection techniques have to be efficient, robust and unique to restrict malicious users. Some of the applications of watermarking include ownership protection, proof for authentication, air traffic monitoring, medical applications, music industry etc. It is very difficult to secure digital information especially the audio. Audio watermarking has become a challenge to developers because of the impact it has created in preventing copyrights of the music. Note that it is necessary to maintain the copyright of the digital media, which is one form of intellectual property[6].Watermarking is the process of embedding information into a signal. The signal may be audio, pictures or video. The embedded information is known as a watermark. The Watermarking is an efficient method to protect contents from the unauthorized copying and other issues related to audio data. Watermarking is the process of hiding secret information in to an original data[8].

2. WORKING TECHNOLOGY

2.1 BASIC CONCEPT

A watermarking system consists of two blocks:

1. Embedding:
   A Watermark Consists of a binary data sequence is inserted into the original signal in the watermark embedder. This watermark embedder has a two input: one is the watermark message and other is original signal(Audio). The output of the watermark is the watermarked signal as shown in Fig1.
2. Extraction:

The Detector extract the embedded watermark from the watermark signal. Watermarking method can be classified into three categories based on watermark detection. They are Blind, Non-Blind, Semi-Blind. Blind Watermarking method does not need the original signal to extract watermark signal. Semi-Blind Watermarking method needs some information of original signal to extract the watermark information. Non-Blind Watermarking method needs the original signal to extract the embedded watermark as shown in Fig 2.

The key is used to increase security, which is prevention of unauthorized users from manipulating or extract the watermark.

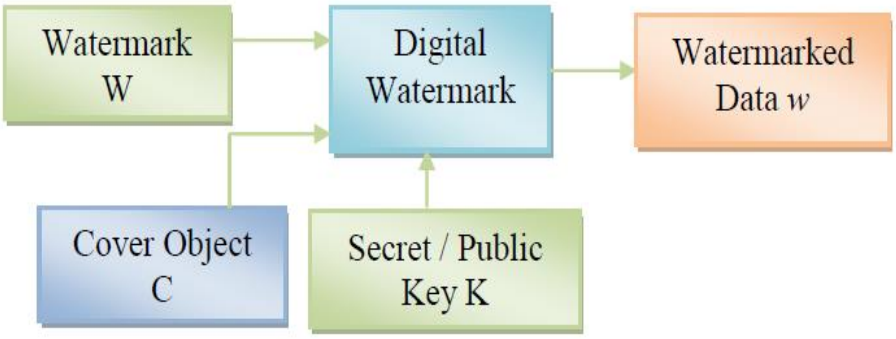

Fig 1: Digital Watermarking - Embedding Process[7]

For the embedding process the inputs are the watermark, cover object and the secret or the public key. The watermark used can be text, numbers or an image. The resulting final data received is the watermarked data W [7].

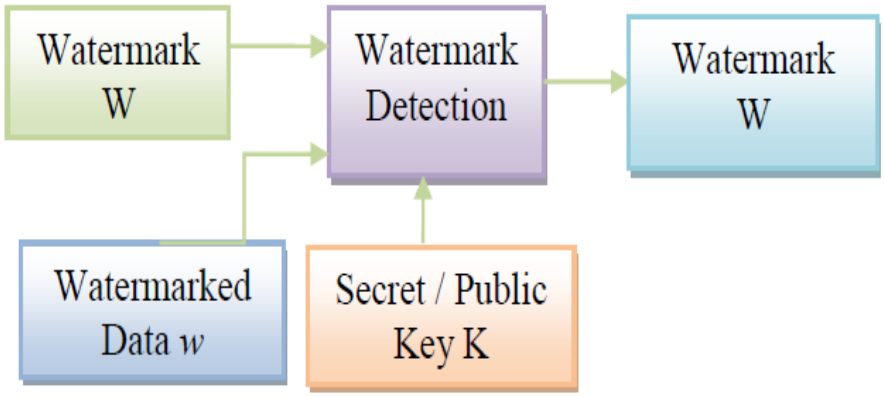

Fig 2: Digital Watermarking - Extracting process [7]

2.2 Techniques of Watermarking

I. Time Domain Technique:-

In time domain technique, watermark is embedded without any transformation & watermark can be easily destroyed. Various time domain embedding techniques for digital audio signal such as Least Significant Bit (LSB) replacement, Echo hiding, phase coding and Spread Spectrum [9].

1) **Least Significant Bit (LSB) Technique:** LSB method Embeds the watermark information in the least significant bits of the host signal. It is based on the substitution of the LSB of the carrier signal with the bit pattern from the watermark noise. The robustness depends on the number of bits that are being replaced in the host signal[6].

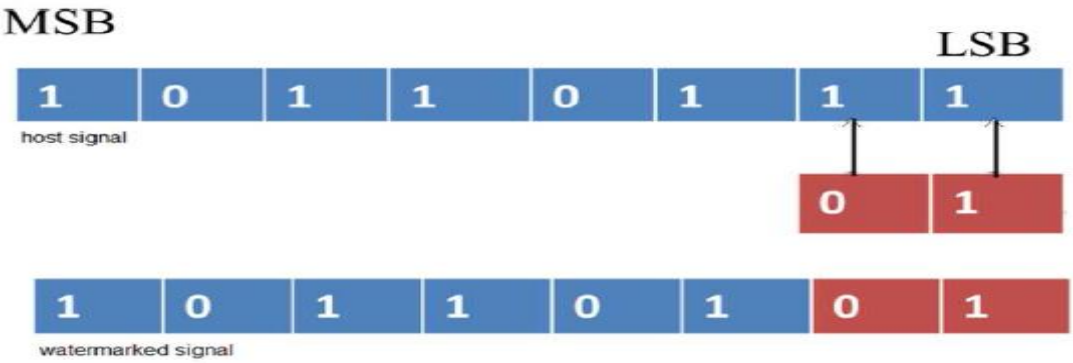

Fig. 3 LSB Coding[6]

2) Echo Hiding Technique*:* In Echo Hiding Technique Watermark is Embedded into the original discrete audio signal by introducing a repeated version of a component of the audio signals with small offset , initial amplitude and decay rate to make it imperceptible, only binary bits is embedded into audio-signal. Embedding is possible by convolving the audio signal with all zero and one kernel. Then by using watermark data bits particular output are combined to form watermark signal. In a single sample of audio signal can embed only one bit of watermark hence blind detection can be applied for watermark data extractions. But this technique is simple and easy to implement. But watermark embedding capacity is very low [6].

3)Spread Spectrum Technique: It adds embedding of watermark in the original audio signal by spreading it over the bandwidth of audio signal, this technique uses direct sequence spread spectrum. For spread the watermarking data PN sequence used whole frequency range of audio then added to the audio signal by attenuation. So watermark data considered as a random noise. Similarly same sequence use for extractions. Watermark data shows interrelationship between audio watermark and PN sequence[6].

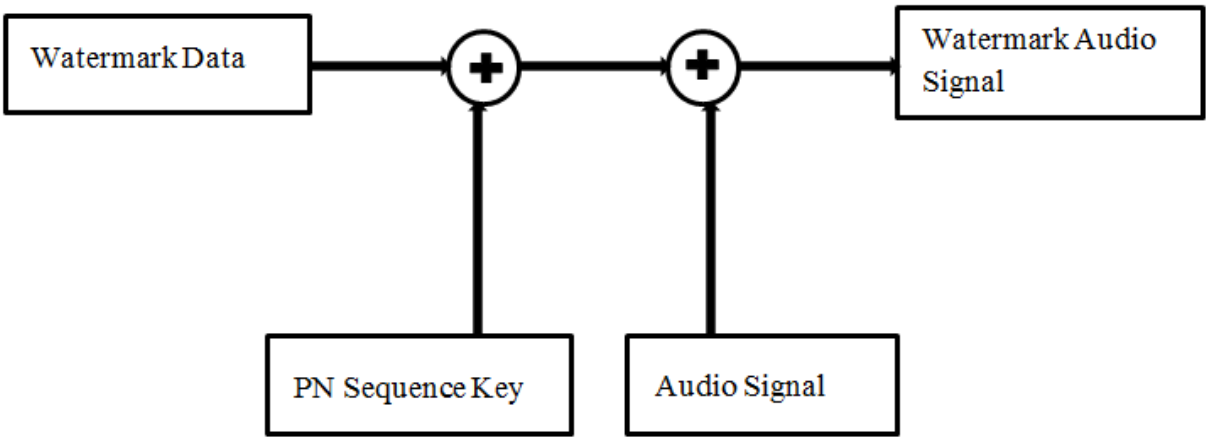

Fig. 4 :Direct Sequence Spread Spectrum Technique[6]

- **Advantages :**
  1.It is very easy to implement and requires few computing resources.
  2.Performance at imperceptibility is good.

- **Disadvantages :**
  1.It is less robust to various attacks like resampling, low pass filtering, compression, etc.
  2. It require less computation as compared to transform domain technique.

II. Transform Domain Audio Watermarking: -

1) **Discrete Wavelet Transform (DWT):** Discrete Wavelet Transform provides the sufficient information for both analysis and synthesis signal and is easier to implement. Wavelets can be used to extract information from many kinds of data, including audio signals and images[9]. is taking popularity it can decompose the signal in both time domain and frequency domain at the same time keeping the calculation to obtain DWT coefficient small as compared to DFT and DCT, the number of advantages of applying DWT on audio signal such as able to localize the audio in time-frequency both with multi resolution property, different composition levels are available and number of operations are less than DCT and DFT if there are maximum number of samples are available, number of operation in DFT, DCT and DWT are `O` i.e. (N $\log_2$(N), 0(N $\log_2$(N) and 0(L.N where L is length of filter of the wavelet filter. data pay load capacity 172bps, without wavelet domain watermark data degrading SNR too[6].

2) **Discrete Cosine Transform(DCT):** It is similar to DFT but having co-efficient are real value, property of DCT such as high compaction of signal power, in transform domain it is used to embed data in the form of transform domain[6].

3) **Discrete Fourier Transform:** It decompose the signal to it's a fundamental and harmonically related signal magnitude coefficient are replaced by the watermark data in the range of 2.3-6.5 KHz. Phase difference between phase signal coefficient and phase reference coefficient is used to modify the phase difference coefficient has to be subtract added when the watermark bit zero or one respectively[6].

3. REQUIREMENTS FOR AUDIO WATERMARKING:

- **Perceptual transparency:** In the watermarking main requirement of Perceptual transparency. Watermark embedded in audio files can be of two types. They can either be perceptible or imperceptible. Imperceptible watermarks are choose in of audio files because of their better robustness.
- **Robustness:** Robustness of watermarking systems , must be able to handle all types of attacks whether it is conversion, compression, Noise or any other form of attack.
- **Capacity:** The efficient watermarking technique should be able to stored large amount of data but should not degrade the quality of the audio signal.
- **Speed:** Speed of embedding is one of the factors for efficient watermarking technique. The speed of embedding of watermark is important in real time applications where the embedding is done on continuous signals such as, speech of a politician or language between pilot and communication system workers.
- **Security:** A watermark system is said to be secure, if the unauthorized users cannot remove the watermark without having full knowledge of embedding algorithm, detector and composition of watermark. Only the authorized user can access watermark.

4. APPLICATION OF AUDIO WATERMARKING:

- **Copyright protection/proof of ownership:** Digital watermarking can be used to identify and protect official document ownership. In copyright protection the watermark embedded in to original host signal contains a unique proof of ownership. Digital content can be embedded with watermarks depicting metadata identifying the copyright owners[10].
- **Broadcast Monitoring:** Main use of broadcast monitoring is to protecting commercials and the valuable TV products like news items from illegal transmission. By embedding a watermark in commercial advertisements, an automated monitoring system can verify whether the advertisements are broadcasted has actually been broadcasted or not.
- **Medical applications:** Names of the patients can be printed on the X-ray reports and MRI scans using techniques of visible watermarking. The medical reports very important in the treatment offered to the patient . If there is a mix up in the reports of two patients this could lead to a catastrophe. so embedding

the date and patient's name in medical images could increase the confidentiality of medical information as well as the security.

- **Fingerprinting:** To trace the source of illegal copies, the owner can use a fingerprinting watermarking technique. the owner can embed unique watermark in the copies of the signal that is a good way to detect customers who break their license agreement by copying the protected data and supplying it to a third party.
- **Tamper Detection***:* Tamper detection application is to detect modification of original data. secondary information is embed in the original signal and can be used to check if the original signal is tampered..

5. Different Types of Attacks:

- **Compression:** Compression attack reduced the size of watermarked audio signal
- **Resampling:** During analog to digital conversion a signal can be resampled at different sampling frequencies.
- **Requantization:** In a Requantization a signal can be requantized with different quantization level as we change the quantization error also changed and number of bits used to represent per sample also changed.
- **Filtering:** It is used to filter certain frequency components of any signal.
- **Additive White Gaussion Noise**: Added to watermark signal during attack.
- **Cropping:** Remove the certain part from the watermarked signal.

6. RELATED WORKS

6.1 LITERATURE REVIEW

6.1.1.Novel Robust Audio Watermarking Scheme against Synchronization Attacks:

- In[1] Mingyuan Cao , Chen Li , Zongze Wu , LihuaTian , Shaoyi Du,A robust audio watermarking scheme based on the dual watermarking algorithms are used to resist different attacks. First, the largest singular value of every frame is calculated after DWT and segment. Then the watermark is embedded several times, for redundancy, by adjusting the largest singular values of the frames according the pre-set rule.This algorithm works well in the case of common signal processing. Second, a histogram is generated based on the overall information of the signal in time domain. The watermarking is then embedded into the histogram by exchanging the value of adjacent two bins.

6.1.2.Multiple Watermarking on Digital Audio based on DWT Technique:

- **In[2]**Satish Chandra Kushwahal, Pallavi Das2, Madhuparna Chakrabortl, An effective multiple watermarking algorithm based on Discrete Wavelet Transform for audio signal. Embedded multiple watermark can be easily and faithfully recovered under different common signal processing attacks such as high pass filtering, compression, amplification normalization, noise reduction, amplification, delay re-quantization. The algorithm gives satisfactory result against common signal processing attacks.

6.1.3. DWT-SVD Based Blind Audio Watermarking Scheme For Copyright Protection:

- In[3] Krishna Rao Kakkirala, Srinivasa Rao Chalamala, Bala Mallikarjuna Rao G, A new blind audio watermarking method using discrete wavelet transform (DWT) and singular value decomposition (SVD). This method embeds each bit of the watermark to one of the Eigen values of the audio frame in DWT and SVD space and robustly retrieves the watermark to prove the ownership without requiring original audio. The proposed blind audio watermarking method is robust to various compression formats, sampling rate changes and signal processing attacks.

6.1.4. An imperceptible and robust audio watermarking algorithm:

- In[4] Ali Al-Haj, A semi-blind, imperceptible and a robust audio watermarking technique based on cascading two well-known transforms: the discrete wavelet transform and the singular value decomposition. The two transforms provide different, but complementary, levels of robustness against watermarking attacks. The uniqueness of the proposed algorithm is twofold: the distributed formation of the wavelet coefficient matrix and the selection of the off-diagonal positions of the singular value matrix for embedding watermark bits. Imperceptibility, robustness, and high data payloads achieved.

6.1.5. A Symbol Based Watermarking Approach for Spread Spectrum Audio Watermarking Methods:

- In[5]a symbol based audio watermarking process using log coordinate mapping feature, which is robust to geometric audio distortions. A symbol audio watermark methods has been proposed in order to reduce the required size of the audio sequences for watermarking. Each group of watermark bits called as a symbol are mapped to a unique pseudo-random sequence. We can increase the number of symbols and hence the embedding capacity at the cost of more computational complexity which reduces the required audio length to embed whole watermark sequence. This proces can also reduce the errors in longer duration audio due to repetitive adding of the symbols, by considering results from multiple segments to produce final result.

6.2 COMPARATIVE TABLE

Table -1: Comparative Table

Sr.no	Paper Title	Method Used	Advantage	Disadvantage
1	Novel Robust Audio Watermarking Scheme against Synchronization Attacks	DWT,SVD	Robustness against common signal processing and synchronization attack.	Performance is not good when faced dual attacks
2	Multiple Watermarking on Digital Audio based on DWT Technique	DWT	High robusness against common signal processing attack	Performance s not good against Synchronization attack
3	DWT-SVD Based Blind Audio Watermarking Scheme For Copyright Protection	Blind audio watermarking	Robust against common signal processing	Accuracy improved by using error correction code
4	An imperceptible and robust audio watermarking algorithm	semi-blind, imperceptible, and robust digital audio watermarking algorithm	high degrees of imperceptibility and robustness. High data payload	de-synchronization attacks
5	A Symbol Based Watermarking Approach for Spread Spectrum Audio Watermarking Methods	Spread Spectrum	higher embedding capacity	Improved errors in symbol detection

6.3 CURRENT ISSUES:

According to literature Analysis Audio watermarking is one of the method which can be used for data hiding or secure mechanism. So after complete literature survey we found issue in audio watermarking like it can not work on large content, and also it will not secured from different type of attacks. So using the proposed method that use DWT+SVD embedding with transformation to make the system more robust than existing and also improve data capacity.

7. PROPOSED WORK:

- We propose an effective audio watermarking algorithm that is based on the DWT and SVD. In the propose algorithm process start with load audio data after loading audio data the watermarking system converted data into appropriate sample. This process is called sampling. This sampling data further going into small parts. This part called segment. This process is called segmentation. The DWT transform decomposes the audio signal into several multi-resolution sub bands for embedding the watermark bits. The watermark bits are embedded in the high-resolution sub bands of the audio signal. To increase the robustness we apply 3 level discrete wavelet transform. First, the largest singular value of every frame is calculated after DWT and segment and also apply SVD for the low frequency. Then the watermark is embedded.

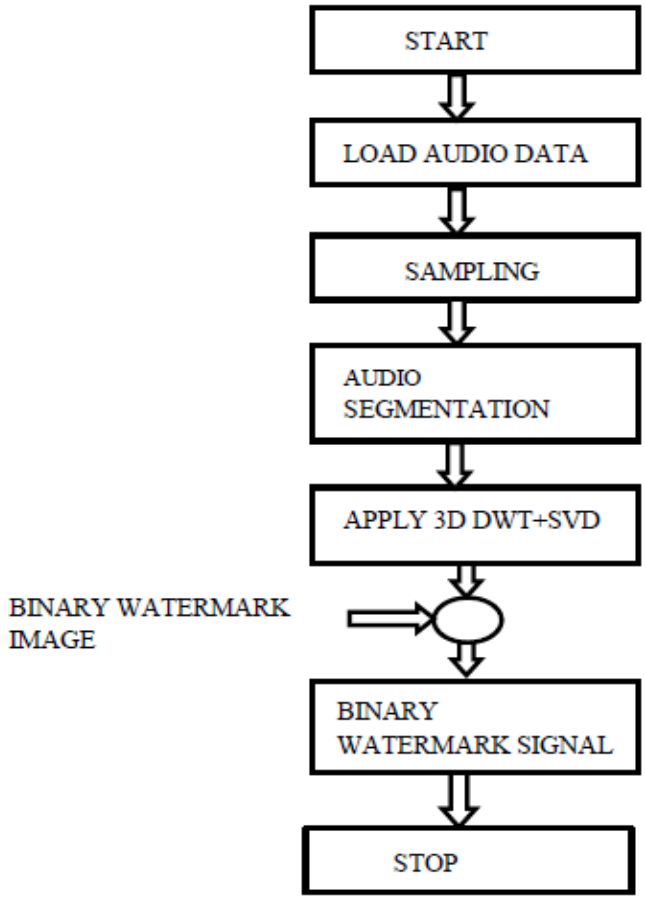

FIG 5. Watermark Audio Signal

8. FUTURE WORK

Dual watermarking scheme algorithm is robust against common signal processing attack but against synchronization attack performance is not good. So in future work we will focus on improving robustness and also improve the preformation when faced the dual attack.

9. CONCLUSIONS

Audio watermarking is a latest domain in field of watermarking. Audio watermarking has become a challenge to developers because of the impact it has created in preventing copyrights of the music that it is necessary to maintain the copyright of the digital media, which is one form of intellectual property. watermarking is the process of embedding information into a signal. The signal may be audio. The watermarking is an efficient method to protect contents from the unauthorized copying and other issues related to audio data. In these paper we discussed different different type of techniques of watermarking. The result is that algorithm performance is not good when facing dual attack.

10. ACKNOWLEDGEMENT

The authors are very much grateful to Department of Computer Engineering, L.J Institute of Engineering & Technology, Ahmedabad, from Gujarat Technological University; for giving opportunity to do research work on audio watermarking . Two authors Sarita Firke, and Prof. Gayatri Pandi (Jain) are also Management, Principal of L.J Institute of Engineering & Technology, Ahmedabad, from Gujarat Technological University; for giving constant encouragement to do research work in the Department.

11. REFERENCES

[1] Mingyuan Cao, Chen Li, Zongze Wu, LihuaTian, Shaoyi Du " Novel Robust Audio Watermarking Scheme against Synchronization Attacks **"**ICIMCS '16, August 19-21, 2016, Xi'an, China © 2016 ACM.

[2] Satish Chandra Kushwaha, Pallavi Das, Madhuparna Chakraborty "Multiple Watermarking on Digital Audio based on DWT Technique **"**978-1-4799-8081-9/15/$31.00 © 2015 IEEE.

[3] Krishna Rao Kakkirala, Srinivasa Rao Chalamala, Bala Mallikarjuna Rao G "DWT-SVD Based Blind Audio Watermarking Scheme For Copyright Protection **"**978-1-4799-3903-9/14/$31.00 ©2014 IEEE.

[4] Ali Al-Haj "An imperceptible and robust audio watermarking Algorithm" Al-Haj EURASIP Journal on Audio, Speech, and Music Processing 2014, 2014:37.

[5] Bala Mallikarjunarao Garlapati, Srinivasa Rao Chalamala "A Symbol Based Watermarking Approach for Spread Spectrum Audio Watermarking Methods" 2166-0670/16 $31.00 © 2016 IEEE

[6] Mr. R. D. Shelke "Audio Watermarking TechniqueProtection: A Review" 2016 International Conference on Global Trends in Signal Processing, Information Computing and Communication.

[7] Monika Patel, Priti Srinivas Sajja, Ravi K. Sheth, " Analysis and Survey of Digital Watermarking Techniques" Volume 3, Issue 10, October 2013 ISSN: 2277 128X.

[8] Maria Michael.E / PG Scholar, Mr.Harikrishnan.N / Assistant Professor, " Audio Copyright Protection against Various Attacks" SSRG International Journal of Electronics and Communication Engineering (ICEHS),May 2017.

[9] Mangal Patil, J. S. Chitode, "Improved Technique for Audio Watermarking Based on Discrete Wavelet Transform" International Journal of Engineering and Advanced Technology (IJEAT) ISSN: 2249 – 8958, Volume-2, Issue-5, June 2013.

[10] Prabhishek Singh, R S Chadha "A Survey of Digital Watermarking Techniques, Applications and Attacks" ISSN: 2277-3754 ISO 9001:2008 Certified International Journal of Engineering and Innovative Technology (IJEIT) Volume 2, Issue 9, March 2013.

[11] Neethu V, R.Kalaivani "Efficient and Robust Audio Watermarking for Content Authentication and Copyright Protection" 2016 International Conference on Circuit, Power and Computing Technologies [ICCPCT].

[12] Huan Zhao1,Fei Wang1, Zuo Chen1, Jun Liu1 "A Robust AudioWatermarking Algorithm Based

on SVD-DWT" ELEKTRONIKA IR ELEKTROTECHNIKA, ISSN 1392-1215, VOL. 20, NO. 1, 2014.

[13] http://ijcsit.com/docs/Volume%206/vol6issue03/ijcsit20150603238.pdf.

BIOGRAPHIES

	**Sarita Firke** received the B.E. degree in Computer Sciences and Engineering from Gujarat Technological University in 2013 and student of M.E. in Computer Engineering, L.J Institute of Engineering & Technology, Ahmedabad, from Gujarat Technological University; Currently he is doing research work in Li-Fi.
	**Gayatri Pandi (Jain)** is Associate Professor and Head of the Department of PG Department., L.J Institute of Engineering & Technology, Ahmedabad, from Gujarat Technological University; more than 15 years' experience in teaching.