Design of a Precise Temperature Monitoring System for Biomedical Applications

Akanksha Dixit, Shrutika Tiwari, Pulkit Trivedi

Asst. Professor, Electronics & Communication Department, GGITS, Jabalpur, M.P.
M. Tech. Scholar, Electronics & Communication Department, GGITS, Jabalpur, M.P.
HOD, Electronics & Communication Department, OIST, Jabalpur, M.P.

ABSTRACT

Health monitoring of a patient is a major concern in the biomedical field. In order to monitor a patient's health we have to look after certain parameters out of which temperature monitoring is a major parameter. The proposed system gives a temperature monitoring system which uses an RTD temperature sensor, the output of which is further synthesized to get a temperature of accuracy upto 0.01˚C.In order to get this accuracy we have made certain calculations to get the right components of the system which should consume less power and provide an accurate and linearised result. The system is designed to use a Pt100 Sensor whose output is fed to a programmable gain amplifier of gain 10 to get an amplified output. This amplified output is fed to a 16 bit ADC to get a precise measurement. This precise signal is processed with the help of an FPGA and then sent to the PC using UART and RS232 interface. The given system can be used to measure the temperature of patients as well as for the study of absorption spectra of fat and oil samples.

Keywords: - *RTD, ADC, FPGA, Pt100, Temperature Monitoring, Biomedical*

1. INTRODUCTION

Embedded system has designed around Field Programmable Gate Array (FPGA) using Very High Speed Integrated Circuit Hardware Description Language (VHDL). FPGA technology is used to achieve greater flexibility and integrated solution with improved reliability. VHDL is being used to realize modular design, re-usability of code and easy integration with other systems.

The proposed design scheme is shown block diagram, in which the analog data of the temperature sensor would be digitized using Analog to Digital Converter (ADC) after signal conditioning module. The received digital data of temperature sensor would be linearized and processed in FPGA using different modules designed in VHDL. Designed embedded system will have UART interface to display the continuously measured temperature with locally and to send the measured temperature remotely using RS232 interface respectively.

1.1 Problem Definition

For scientific applications a system is required that should be able to measure the temperature of wide range from -100°C to +500°C with the resolution of 0.1°C. The design system should be able to measure the temperature remotely from the measuring system. For scientific applications a system has to design which should be able to monitor the temperature at a distance of 20 meter in real time.

1.2 Proposed Solution

The system which we have designed contains different modules where RTD is simply a temperature sensor which we have used to sense the temperature of the range from -200°C to +850°C. The received temperature is then amplified by the programmable gain amplifier (PGA) of gain 10. Then the output of the gain amplifier is fed to 16-bit analog-to-digital converter (ADC), which converts analog temperature to digital form. This digitized data is fed to FPGA where we have performed controlling operations. After performing controlling operations we have monitored the temperature on PC by UART using RS-232 standard. The block diagram for the desired system has been shown in the figure below.

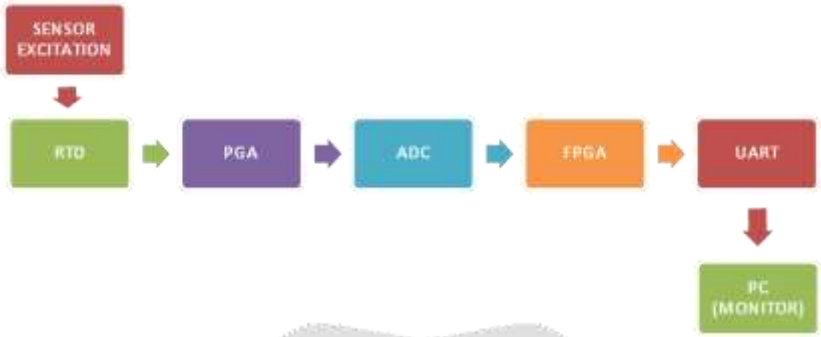

Fig -1: Block diagram of the proposed system

2. COMPONENT SELECTION

In order to get a good accuracy, a high temperature range and a precise measurement we have to choose the above mentioned components properly. So, we have performed certain calculations and literature survey to get the best parametric performance of the desired system. The component selection has been described ahead taking each component separately for the best performance results.

2.1 Temperature Sensor

Various temperature sensor techniques are used to measure temperature and convert it into other useful electrical parameters. We have gone through a lot of literature survey and found that, amongst the other methods of temperature sensing i.e. Thermistor, thermocouple, IC sensors and bimettalic devices, RTDs provide a wide range and good linearity. So, in the proposed architecture we have used a Resistance temperature sensor (Pt100). The relationship between a platinum resistance temperature detector and temperature is standardized. The resistance value of a resistance element at 0°C is called the nominal resistance. At present the nominal resistance if 100Ω, the current that flows that continuously through the resistance elements is called the standard current. The present standard currents are 1mA, 2 mA and 5 mA. We have used a 1.234mA Constant current source for the excitation of the temperature sensor. The low current excitation source is used to avoid self heating.

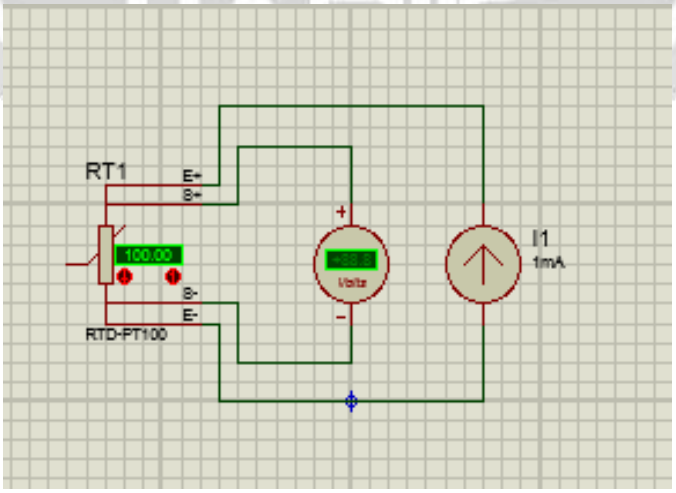

Fig -2: Pt100 Temperature sensor in four wire configuration

2.2 Programmable Gain Amplifier (PGA)

Programmable gain amplifier implements an op-amp based non-inverting amplifier with user programmable gain. This amplifier has high input impedance, wide bandwidth, and selectable input voltage reference.LTC-6912 is a

family of dual channel,low noise ,digitally programmable gain amplifier (PGA). The gains for both channels are independently programmable using a 3 wire SPI interface to select gains. The required gain for the PGA is found to be 10, So we have used a PGA of Gain 10.

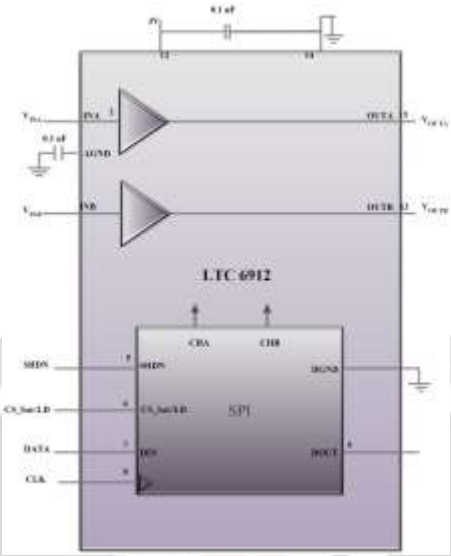

Fig -3: Internal structure of Programmable Gain Amplifier

2.3 Analog to Digital Converter (ADC)

The AD7606 is 16-bit, simultaneous sampling, analog-to-digital Data acquisition system (DAS) with eight channels .Each part contains analog input clamp protection, a second-order antialising filter, a track-hold amplifier, a 16-bit charge redistribution successive approximation analog-to-digital converter (ADC), a flexible digital filter, a 2.5V reference buffer, and high speed serial and parallel interfaces. It digitizes the analog data of temperature sensor after the signal conditioning. The received digital data of temperature sensor is then linearized and processed in FPGA.

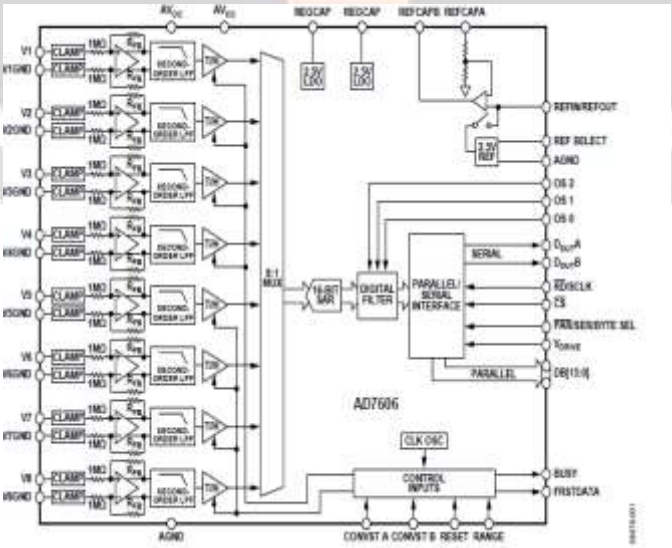

Fig -43: Internal structure of ADC AD7606

2.4 FPGA

A field programmable gate array (FPGA) is a programmable logic device that supports implementation of relatively large logic circuits. To implement the required function FPGA provides logic blocks.

Xilinx FPGA is array based programmable logic device i.e. each chip contains two dimensional array of logic blocks that can be interconnected through horizontal and vertical routing channels .Logic blocks are based on the Look Up table .Look up table is a one bit wide memory array where the address lines for memory are the inputs of logic blocks and one bit output from the memory is the LUT output. Configurable input/output blocks are used to bring signals onto the chip and send back again.

An FPGA is like a kit of logic chips you can wire together any way you like. In use, there's nothing to limit the speed of the logic. Change an input, and it's possible for outputs to change immediately. In usual practice, there may be clocks and registers holding data and so forth, so outputs change after a few clock cycles. The essential point of an FPGA is to allow engineers to make a complex digital system without actually obtaining and wiring together a bunch of chips, or investing time and money in designing a new one. FPGA excel for prototyping, since the interconnections of their logic units can be changed "easily" (for an FPGA engineer who knows VHDL), and also for small-run specialized products such as exotic scientific instruments, one-of-a-kind control systems for an industrial machine, communications equipment needing fast DSP.

Fig -5: FPGA Spartan 6

3. ANALYSIS & CALCULATIONS

The components stated above are selected based on some calculations. Every component on the system has its own significance and importance in providing an accurate and precise temperature output. So. Every component has been analyzed to get the most out of it and produce a stable and accurate system which can measure the temperature accurately and precisely

3.1 Calculations for RTD

We have the known values of :

Iref = 1.234 mA from the constant current source

VRTD = 0.137 mV and 0.141 mV

R1 = 181.5 Ω
V1 = 0.224 mV

Then, Resistance of RTD due to room temperature

$V1/V2 = R1/R_{RTD}$
$(0.224)/(0.137) = (181.5)/R_{RTD}$
$R_{RTD} = 111.006\ \Omega$

Resistance of RTD due to body temperature

$V1/V2 = R1/R_{RTD}$
$(0.224)/(0.141) = (181.5)/R_{RTD}$
$R_{RTD} = 114.247\Omega$

Calculation of RTD voltage at it's minimum and maximum temperature value

At (-200ºC)

VRTD = RRTD* Iref
VRTD = 18.9(Ω) * 1.234(mA)
VRTD = 23.3226 mV

At (+850 ˚C)

VRTD = RRTD* Iref
VRTD = 390.26(Ω) * 1.234(mA)
VRTD = 481.58084 mV

Now, calculating RTD resistance at temperature T˚C

RTD(T) = RTD0* (1 + T* α)
RTD(T) = 100 * (1 + 0.02 *0.00385)
RTD(T) = 100.007 Ω

Calculating the RTD resistance difference at temperature T°C and 0°C

ΔR = RTD(T) – RTD0
ΔR = (100.007 - 100)˚C
ΔR = 0.007 Ω

Then the voltage difference for RTD will be

ΔV = ΔR *Iref
ΔV = 0.007 * 1.234
ΔV = 8.6 * 103 mV
ΔV = 8.6 µV

3.2 Calculation for selecting PGA

Since the output voltage from RTD is of the range of mV or µV so we need to amplify this voltage. For the amplification of voltage we have used PGA whose gain is programmable . For our requirement we select the value of gain equal to 10.

4.3 Calculation for selecting ADC

Gain of PGA = 10

Then the RTD voltage at (-200) ˚C with gain 10 is

VRTD = (RRTD* Iref) * 10
VRTD = (18.9(Ω) * 1.234(mA)) * 10
VRTD = 23.3226 mV
VRTD = 0.233V

The RTD voltage at (+850) ˚C with gain 10 is

VRTD = RRTD* Iref
VRTD = 390.26(Ω) * 1.234(mA)
VRTD = 481.58084mV
VRTD = 4.816V

And the voltage difference for RTD with gain 10 will be

$$\Delta V = (\Delta R * I_{ref}) * 10$$
$$\Delta V = (0.007 * 1.234) * 10$$
$$\Delta V = 86 * 10^3 \text{ mV}$$
$$\Delta V = 86 \ \mu V$$

from above calculation we conclude that the voltage range of ADC should be of 5V.Our requirement is to resolve voltage of 86μV. So the resolution of ADC should be of 86 μV. A 16-bit ADC fulfils these requirements.

4. CONCLUSIONS

The presented work can be used to determine the temperature of the oil and fat samples to determine the absorption spectra. The present system has a wide range of measuring temperature from -200˚C to 850˚C. The presented system uses a PGA of gain 10 and ADC of 16 bit to give an accurate data of 0.02˚C. The system can further be used to determine the temperature of a patient which can continuously measure temperature in order to take a continuous eye on the patient's health. The system can further be linearised to get a more linear relation between temperature and resistance of Pt100.

6. REFERENCES

[1]. T. Nandhakumar , Haider A. F. Mohamed, B.A.C.M. Naleem and V.Ganeish Faculty of Engineering,"An FPGA Based Real-Time Remote Temperature Measurement System", 2010 international conference of electronic devices, systems and applications.

[2]. T. Nandha Kumar, TarekMohd, A.K AL Saleh, SRS. Prabaharan, Haider A.F. Mohamed, "An FPGA Based Temperature controller for differential Thermal Analyzer ",ICROS-SICE International joint Conference 2009 August 18-21,2009,Fukuoka International congress Centre ,Japan

[3]. . Swamy TN, Rashmi KM, "Data AcquisitionSyatem based on FPGA", internation journals of Engineering Reasrch and Applications, vol. 3, issue 2,March- April 2013.

[4]. UzmaQuadri, PankajRangaree, Dr.Gajendra M. Asutkar, "FPGA Implementation of an Emulator for Wireless Sensor Node with Pt100 Temperature Sensor", IEEE 2013.

[5]. X. Huang, M. C. Mowlem, R. Pascal, K. Chamberlain, C. Banks, H. Morgan, "A Miniature High Precision Conductivity and Temperature Sensor system for Ocean Monitoring",14 th international journals on Miniaturized System For Chemistry and Life Sciences 3-7 October 2010, Groningen, The Netherland.

[6] Baldomir Zajc , Andrej Trost- "FPGA emulators in Digital Circuits Education" IEEE AFRICON 2004.

[7] Baldomir Zajc, Andrej Trost- "Logic Emulators in Digital Systems Education" EUROCON - International Conference on Computer as a Tool (EUROCON), 2011 IEEE.

[8] Vladimir Kasik,Ibrahim Salem JAhan,Ales Kurecka-"FPGA Based Digital Logic Emulator for Educational Purposes", 2011 International Conference on Software and Computer Applications IPCSIT vol.9 (2011) © (2011) IACSIT Press,Singapore.

[9] Nadim Nasreddine, Jean Louis Boizard, Christophe Escriba, Jean Yves Fourniols-" Wireless Sensors Networks Emulator Implemented on a FPGA" Field-Programmable Technology (FPT), 2010 International Conference.

[10] Ahmed Usman Khalid, Zeljko Zilic and Katarzyna Radecka-"FPGA Emulation of Quantum Circuits" Computer Design: VLSI in Computers and Processors, 2004. ICCD 2004. Proceedings. IEEE International Conference.