SMART HOME CONTROL SYSTEM USING WIRELESS NETWORK

S.LydiaKirubai[1], Mrs.A.Prabha[2], Dr.S.Priya[3], Dr.A.Suresh[4]

1.P.G.Scholar,Department of EEE, S.A. Engineering College, Chennai.
2.AssistantProfessor,Department of EEE, S.A. Engineering College, Chennai.
3.HeadoftheDepartment, EEE, S.A. Engineering College, Chennai.
4.Professor,DepartmentofEEE, S.A. Engineering College, Chennai.

ABSTRACT

This paper presents a home control and monitoring system using an embedded micro-web server at low cost, with an IP connectivity, which can access and control the devices and appliances remotely using Android based Smart phone app. The proposed system does not want a dedicated server PC with respect to other systems and it is offering a novel communication protocol to monitor and control the home environment with switching functionality.

Keyword: *IoT, smart home control, efficient monitoring ,low cost*

I. INTRODUCTION

Internet of Things (IoT) is an emerging technology that is making our world smarter. The idea of connected world cannot be imagined without IoT. An IoT based Smart Home is one such example. In IoT enabled Smart Home environment various things such as lighting, home appliances, computers, security camera etc. all are connected to the Internet and allowing user to monitor and control things regardless of time and location constraint. IoT technology can also be applied to create a new concept and wide development space for smart homes to provide intelligence, comfort and to improve the quality of life.

In this paper, we extend our previous work and present a low cost and flexible home control and monitoring system using an embedded micro-web server, with IP connectivity for accessing and controlling devices and appliances remotely using Android based Smart phone app. The proposed system does not require a dedicated server PC with respect to similar systems and offers a novel communication protocol to monitor and control the home environment with more than just the switching functionality.

II.PROPOSED SYSTEM

The proposed system is a novel, standalone, flexible and low cost home controlling and monitoring system using RESTful based Web services. The system consists of a micro Web-server based on Arduino Ethernet, hardware interface modules and the Android compatible Smart phone app. The architecture presented in this work can be customized in different ways in order to accommodate different application scenarios with minimum recoding and design i.e. each time a new device is added to the micro Web-server, a new thread dedicated to the device is automatically created in the smart phone app.

III. RELAY MODULE

Magnetic latching relays require one pulse of coil power to move their contacts in one direction, and another, redirected pulse to move them back. Repeated pulses from the same input have no effect. Magnetic latching relays are useful in applications where interrupted power should not be able to transition the contacts.

Magnetic latching relays can have either single or dual coils. On a single coil device, the relay will operate in one direction when power is applied with one polarity, and will reset when the polarity is reversed. On a dual

coil device, when polarized voltage is applied to the reset coil the contacts will transition. AC controlled magnetic latch relays have single coils that employ steering diodes to differentiate between operate and reset commands.

COM - Common connection-It is the center terminal, It is hot as power to the load is connected at this terminal.NO Normally open - It acts like a switch,since it is open - there will be no contact between COM and NO, When we trigger the relay module, it connects to COM by the electromagnet inside the relay and supply to the load is provided,which powers up the light.Thus the circuit is closed until we trigger the state to low in relay. NC Normally closed---->It is always in contact with COM, even when relay is not powered.when we trigger the relay it opens the circuit, so the connection is lost. it behaves just opposite to NO. In this method, using NO connection is used , in this type of relay "HIGH" state in code turns off the relay(opens the circuit). "LOW" state in code turns on the relay.

CONNECTING RELAY WITH ARDUINO

The advantage of using a 5V relay in this project is that the power supply for the relay can be directly given from the Arduino UNO board itself. Let us now see some basics of a relay. A relay is a type of a switch that acts as an interface between microcontrollers and AC Loads.

A simple Single Pole – Single Throw (SPST) relay, like the one used in this project consists of 5 Terminals: 5V, GND, Normally Open (NO), Normally Close (NC) and Common (COMM). Since we need to control this relay with the help of Arduino, a transistor is used with an additional pin called Control Pin on the Relay Module.

V. LCD DISPLAY

A Liquid Crystal Display commonly abbreviated as LCD is basically a display unit built using Liquid Crystal technology. When we build real life/real world electronics based projects, we need a medium/device to display output values and messages. The most basic form of electronic display available is 7 Segment display – which has its own limitations. The next best available option is Liquid Crystal Displays which comes in different size specifications. Out of all available LCD modules in market, the most commonly used one is **16×2** LCD Module which can display 32 ASCII characters in 2 lines (16 characters in 1 line) is used to display the output in our system which can be monitored.

INTERFACING 16x2 LCD TO ARDUINO UNO

LCD modules form a very important part in many arduino based embedded system designs. So the knowledge on interfacing LCD module to arduino is very essential in designing embedded systems.. JHD162A is the LCD module used here. JHD162A is a 16×2 LCD module based on the HD44780 driver from Hitachi**.** The JHD162A has 16 pins and can be operated in 4-bit mode (using only 4 data lines) or 8-bit mode (using all 8 data lines). Here we are using the LCD module in 4-bit mode.

CIRCUIT DIAGRAM

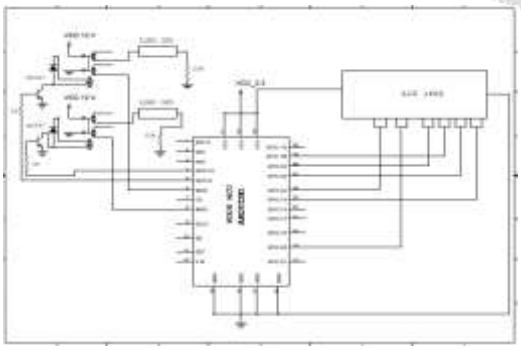

Diagram-1 : Circuit diagram

VI. OPERATION

To wake up, the system will require a “Logic High (H)” level input. The sensor used to detect is PIR sensor. The PIR sensor detects the motion of the human body by the change in the ambient temperature when a human body passes across, and effectively controls the switching when it detects a moving target.

There are three connector pins in Digital PIR sensor modules namely Vcc(5V), Ground (0V) and Output. The output is either LOW or HIGH, depending on whether the sensor has detected movement.Incase of a motion detection, output pin will go HIGH (H). When the motion has stopped, the output returns to and stays at LOW (L). This output signal duration can be adjusted from near 0.3s to 18s by the onboard potentiometer.

Another sensor which is used in the project is the Infrared Proximity Sensor. Infrared Proximity sensor gives output logic High (H) only when an object comes close to the sensor. And, this sensor will respond only to 38KHz modulated infrared light which makes it vulnerable to the disturbance caused by the ambient light.

VII. NODE MCU v2

NodeMCU is an open source IoT platform. Itincludes firmware which runs on the ESP8266 Wi-Fi SoC from Espressif Systems, and hardware which is based on the ESP-12 module. The term "NodeMCU" by default refers to the firmware rather than the development kits. The firmware uses the Lua scripting language. It is based on the eLua project, and built on the Espressif Non-OS SDK for ESP8266. It uses many open source projects, such as lua-cjson, and spiffs.

NodeMCU was created shortly after the ESP8266 came out. On December 30, 2013, Espressif Systems began production of the ESP8266. The ESP8266 is a Wi-Fi SoC integrated with a Tensilica Xtensa LX106 core, widely used in IoT applications (see related projects). NodeMCU started on 13 Oct 2014, when Hong committed the first file of nodemcu-firmware to GitHub. Two months later, the project expanded to include an open-hardware platform when developer Huang R committed the gerber file of an ESP8266 board, named devkit v0.9.[12] Later that month, Tuan PM ported MQTT client library from Contiki to the ESP8266 SoC platform,[13] and committed to NodeMCU project, then NodeMCU was able to support the MQTT IoT protocol, using Lua to access the MQTT broker. Another important update was made on 30 Jan 2015, when Devsaurus ported the u8glib to NodeMCU project, enabling NodeMCU to easily drive LCD, Screen, OLED, even VGA displays.

OPERATION

The home automation circuit is built around an Arduino Uno board, Bluetooth module HC-05 and a 3-channel relay board. The number of channels depends on the number of appliances you wish to control. Arduino Uno is powered with a 12V DC adaptor/power source. The relay module and Wi-Fi module can be, in turn, powered using a board power supply of Arduino Uno.

Wi-Fi module used in this project is HC-05, which supports master and slave mode serial communication (9600-115200 bps) SPP and UART interface. Using these features it can communicate with other Bluetooth-enabled devices like mobile phones, tablets and laptops. The module runs on 3.3V to 5V power supply.

VI. CODING

```
#include <LiquidCrystal.h>

liquidCrystal lcd(7,6,5,4,3,2);

void setup(){

        pinMode(11, OUTPUT);

        pinMode(10,OUTPUT);

        serial.begin(9600);

        lcd.begin(16,2);
```

```
        lcd.print("**

void loop() {
  if (serial.available() > 0)
  { char c = serial.read();
    if (c == 'a')
    { serial.print("in a code");
     digitalWrite(10,HIGH);
     digitalWrite(11,LOW);
     Serial.print("10 HIGH");
     lcd.clear();
     lcd.print("**BULB1 ON**");
    }
       if(c=='b')
    { digitalWrite(11,HIGH);
     digitalWrite(10,LOW);
     serial.print("11 HIGH");
     lcd.clear();
     lcd.print("**BULB2 ON**");
    } if(c=='c')
    { digitalWrite(10,HIGH);
     digitalWrite(11,HIGH);
     lcd.clear();
     lcd.print("**BULB 1,2 ON**");
    }
     if(c=='d')
    {
     digitalWrite(10,LOW);
     digitalWrite(11,LOW);
     lcd.clear();
     lcd.print("**BULB 1,2 OFF**");
    }
  }
}
```

CONCLUSION

The smart home control system using wireless network is hence published efficiently with less cost. The smart home control system using network can be extended by adding new features to the system, by adding extra loads and making some modifications in the system.

REFERENCES

- In 2016, J. E. G. Salas, R. M. Caporal, E. B. Huerta, Member, J. J. Rodriguez and J. J. R. Magdaleno has published paper, "A Smart Switch to Connect and Disconnect Electrical Devices at Home by Using Internet"
- In 2008, M. Merabti, P.Fergus, O. Abualma'atti, H. Yu, and C. Judice has published, "Managing distributed networked appliances in home networks"
- Kortuem, G., Kawsar, F., Fitton., D., Sundramoorthy, V.: Smart objects as building blocks for the internet of things. Internet Computing, IEEE, vol. 14, no.1, 44--51 (2010)
- Liu, Y.: Study on smart home system based on Internet of things technology. In Informatics and Management Science IV. vol. 207, W. Du, Ed., ed: Springer London, 73--81 (2013)
- Al-Qutayri, M.A., Jeedella, J.S.: Integrated Wireless Technologies for Smart Homes Applications. In Smart Home Systems, M. A. Al-Qutayri, Ed., ed: InTech (2010)
- Yan, M., Shi, H.: SMART LIVING USING BLUETOOTH-BASED ANDROID SMARTPHONE. International Journal of Wireless & Mobile Networks (IJWMN), vol. 5, no.5, pp. 65--72 (2013)
- Park, B.: Mobile IP-based architecture for smart homes. International Journal of Smart Home, vol. 6, no.1, 29--36 (2012)

- Perumal, T., Sulaiman, M.H., Sharif, K.Y., Leong, C.Y.: Development of an embedded smart home management scheme. International Journal of Smart Home, vol. 7, no.2, 15--26 (2013)
- Ajah, G, David, N, Abioye, A, Web Based Security System, Sch. J. Eng. Tech, 1(3):112-116, 2013. 2. Mahmood, S M, Abdulsattar, M, Firas, A Y; Home Automation Management with WLAN (802.11g) and RF Remote Control, Raf. J. of Comp. & Math's, 6(1), 2009. 3. Aru O E ,Ihekweaba G, Opara F K, Design Exploration of a Microcontroller Based RF Remote Control 13amps Wall Socket, IOSR-JCE, 11(1), 56-60, 2013. 4. David, N, Design of an Internet Based Security System, NIJOTECH, 29(2) 118-129, 2010.
- Diaa, M F, Mahmood, B M, Data Acquisition of Greenhouse Using Arduino, Journal of Babylon University/Pure and Applied Sciences/ No.(7)/ Vol.(22), 1908-1916, 2014.
- Robotics D, "DHT11 Humidity & Temperature Sensor", 2010, www.micro4you.com/files/sensor/DHT11.pdf
- Anandan, R, Karthik, B, Kumar, K, WIRELESS HOME AND INDUSTRIAL AUTOMATION SECURITY SYSTEM USING GSM, JGRCS, Volume 4, No. 4, 126-132, 2013. 8. Asif, O, Hossain, B, Hasan M, Rahman, T, Chowdhury, M, Fire-Detectors Review and Design of an Automated, Quick Responsive Fire-Alarm, 2014.
- Violino, B, The 'Internet of things' will mean really, really big data, InfoWorld, 2013. http://www.infoworld.com/article/2611319/computer-hardware/the--internet-of-thingswill-mean-really--really-big-data.html