Simulation and Analysis of Efficient Multilevel Inverter for Solar Panel: Review Paper

Dhruvkumar P. Patel[1], Pankaj C. Patel[2]

[1]*Student, Electrical Department, L.C. Institute of Technology, Bhandu, Gujarat, India*
[2]*Professor, Electrical Department, L.C. Institute of Technology, Bhandu, Gujarat, India*

ABSTRACT

In recent years, multilevel inverters have gained more attention for high power applications. A multilevel inverter not only achieves high power ratings, but also enables the use of renewable energy sources. Single phase inverter is widely used for stand-alone systems and micro-grid application. The major limitation faced by multilevel inverters are, number of switches required large which leads to higher switching losses. There are many limitations in extracting power from renewable energy resources. To minimize the power demand and scarcity we have to improve the power extracting methods. Multilevel inverter can be used to extract power from solar cells. In these paper we work on design cascade (5 type, 7 type) multilevel inverter for increase performance of existing system and apply on grid with solar panel. It synthesizes the desired ac output waveform from several dc sources. The main objective of this paper is to study the 5-level and 7-level Cascaded Multilevel Inverter. In this paper the different parameters like voltage, current, THD in 5-level and 7-level Cascaded Multilevel Inverter and analysis on solar panel.

Keywords: -*Solar Panel, Multilevel Inverter, PWM Control, Renewable energy*

1. INTRODUCTION:

Among renewable energy sources, photovoltaic energy is one of the most considerable sources because of its advantages like being widely available and cost free, clean and abundant.

1.1 Current – Voltage Curve for PV cell

The Current – Voltage characteristic curve of a PV cell for a certain irradiance at a fixed cell temperature is shown in image-1. The current from a PV cell depends on the external voltage applied and the amount of sunlight on the cell. When the PV cell circuit is short, the current is at maximum and the voltage across the cell is zero. When the PV cell circuit is open, the voltage is at maximum and the current is zero.

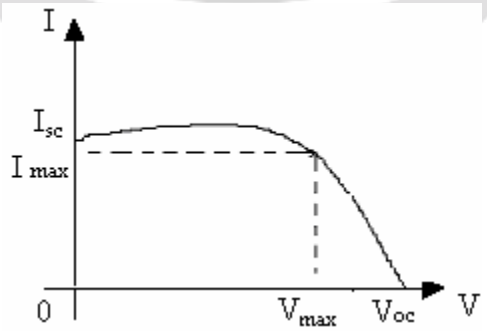

Image-1:Current – Voltage curve

1.2 Introduction to Multilevel inverter

Now a day's many industrial applications have begun to require high power. Some appliances in the industries however require medium or low power for their operation. A multilevel inverter is a power electronic device which is capable of providing desired alternating voltage level at the output using multiple lower level DC voltages as an input.

Types of Multilevel Inverter:
Multilevel inverters are three types.

- Diode clamped multilevel inverter
- Flying capacitors multilevel inverter
- Cascaded H- bridge multilevel inverter

Cascaded H-bridge Multilevel Inverter Topology

A single-phase structure of an m-level cascaded inverter is illustrated in image-2. Each separate dc source is connected to a single-phase full bridge, or H-bridge, inverter.

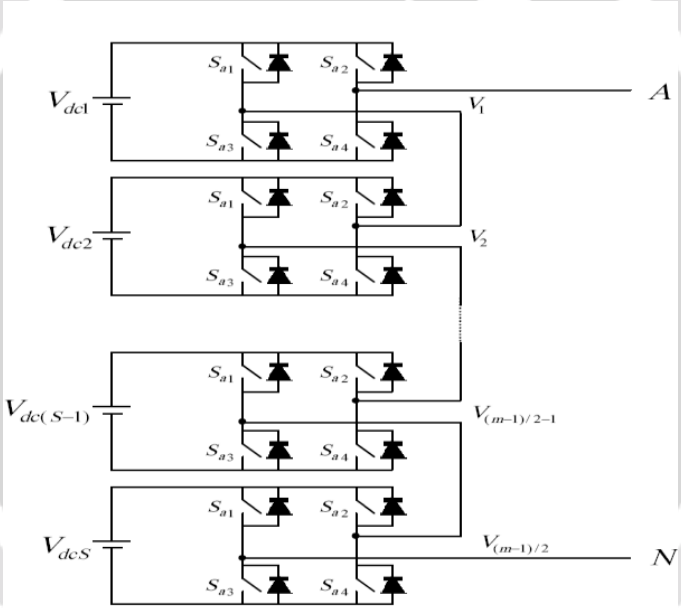

Image-2: Single-phase structure of an m level cascaded H-bridge multilevel inverter

Each inverter level can generate three different voltage outputs, +Vdc, 0, and –Vdc by connecting the dc source to the ac output by different combinations of the four switches, S1, S2, S3, and S4. To obtain +Vdc, switches S1 and S4 are turned on, whereas –Vdc can be obtained by turning on switches S2 and S3. By turning on S1 and S2 or S3 and S4, the output voltage is 0. The ac outputs of each of the different full-bridge inverter levels are connected in series such that the synthesized voltage waveform is the sum of the inverter outputs. The number of output phase voltage levels m in a cascade inverter is defined by m = 2s+1, where s is the number of separate dc sources.

2. Pulse Width Modulation

Pulse-width modulation (PWM) is the basis for control in power electronics. The theoretically zero rise and fall time of an ideal PWM waveform represents a preferred way of driving modern semiconductor power devices.

Pulse width modulation is a technique in which a fixed input dc voltage is given to the inverter and a controlled ac output voltage is obtained by adjusting the on and off periods of the inverter components. This is most popular

method of controlling the output voltage and this method is termed as pulse width modulation technique. PWM is an internal control method and it gives better result than an external control methods.

2.1 Types of PWM techniques

- Single PWM

In single pulse-width modulation control, there is only one pulse per half-cycle and the width of the pulse is varying to control the output voltage.The single pulse-width modulation converts the reference signal to the square wave signal.

- Multiple PWM

In multiple pulse-width modulation control, there isseveral pulses in each half-cycle of output voltage.The gating signals are produced by comparing reference signal with triangular carrier wave. The frequency of the reference signal sets the output frequency and carrier frequency determine the number of pulses per half cycle.

- Sine PWM

In single-pulse and multiple pulse modulation techniques the width of all pulses are same but in sinusoidal pulse width modulation the width of each pulse is varied in proportion to the amplitude of a sine wave. In this technique the gating signals are generated by comparing a sinusoidal reference signal with a triangular carrier wave.

3. LITERATURE REVIEW:

3.1 Grid connected multilevel inverter for PV application

- In this paper [1] Suziana Ahmad, SitiHalmaJohari studies several use of DC to AC multilevel inverters for PV application such as diode clamped multilevel inverter, a capacitor clamped multilevel inverter, a cascaded H-bridge multilevel inverter and a hybrid multilevel inverter. Interestingly, some previous studies suggested the use of multilevel inverter technologies for both single phase grid and three phase grid in PV systems.Results from this study prove that the lowest value of THD as well as the lowest component used in the cascaded H-bridge inverter gives an advantage to this configuration to be implemented in a PV connection application.

3.2 Control of a Single-Phase Cascaded H-Bridge Multilevel Inverter for Grid-Connected Photovoltaic Systems

- In this paper [2] Elena Villanueva, Pablo Correa presents a single-phase cascaded H-bridge converter for a grid-connected photovoltaic (PV) application. A primary goal of these systems is to increase the energy injected to the grid by keeping track of the maximum power point (MPP) of the panel, by reducing the switching frequency, and by providing high reliability.

3.3 Improved Single Stage Grid Connected Solar PV System using Multilevel Inverter

- In this paper [3]Abanishwar Chakraborti1, Mahua Chanda2, Arnab Sarkar3 has proposed. The neutral point clamped three-level inverter topology.This class of inverters can generate an output voltage which is closer to a sinusoidal and hence an improved Total Harmonic Distortion (THD) profile of its output voltage waveform is obtained.Space vector modulation scheme is used to generate the switching pulses for the inverter. One of the most attractive features of a multilevel inverter is that it can generate output voltages with lower value of harmonic distortion and hence filter requirement is less.

3.4 A New High Power Solar Inverter Topology with Reduced DC Potential for Enhanced Reliability

- In this paper [4]K.RamachandraSekhar, Aalok Bhatt shows dual inverter based configuration for the solar energy conversion.The proposed configuration consist of two inverters connected back to back of the

transformer primary winding and secondary winding connected to grid through filter.The reduced DC bus voltage not only offer the flexibility in selection of low rating switches but also reduce the failure rate of devices due to voltage stress.

3.5 Power Quality Improvement Using Solar PV H-bridge Based Hybrid Multilevel Inverter.

- In this paper [5]J.Bangarraju and V.Rajagopal present a novel H-bridge based hybrid multilevel inverter consists of small number of switching devices and output of H-bridge multilevel by switching the solar PV voltage sources in series and parallel. The hybrid modulation method is used to control H-bridge multilevel inverter. The proposed inverter gives more number of output voltages which reduces total harmonic distortion of the output voltage waveform.

3.6 Five level hybrid cascaded multilevel inverter harmonic reduced in PWM switching scheme

- In this paper [6] A. Sarkar, S.Reddy, B. Das, P.R.Kasari, A.Saha, A. Chakrabarti shows Five level hybrid cascaded multilevel inverter with a pulse width modulation method is designed by reducing a number of switches hence reduces switching losses. These inverter topologies are used only six switches, two capacitors and two asymmetrical voltage sources.This topology uses a multi carrier based new PWM method, used to produce a five level output voltage.This proposed circuit has THD-13.96% for a five level output voltage waveform.

4. CONCLUSION:

According to literature analysis solar is one of the main resource of renewable energy and number of application already design based on it. But according to my survey we found certain limitation in existing system like high THD, power loss, efficiency, etc. so using my design reduce these losses and design rebust system.

5. REFERENCES:

[1]Suziana Ahmad, SitiHalmaJohari “Grid connected multilavel inverter for pv application” Energy Conversion (CENCON), 2015 IEEE

[2] Elena Villanueva, Pablo Correa, “Control of a Single-Phase Cascaded H-BridgeMultilevel Inverter for Grid-Connected Photovoltaic Systems” IEEE Transactions on Industrial Electronics (Volume: 56, Issue: 11, Nov. 2009)

[3] Abanishwar Chakraborti1, Mahua Chanda2, Arnab Sarkar3 “Improved Single Stage Grid Connected Solar PVSystem using Multilevel Inverter”, Power Electronics, Drives and Energy Systems (PEDES), 2016 IEEE

[4] K.RamachandraSekhar, Aalok Bhatt “A New High Power Solar Inverter Topology with Reduced DC Potential for Enhanced Reliability”, PCIM Asia 2017; International Exhibition and Conference for Power Electronics

[5] J.Bangarraju and V.Rajagopal, “Power Quality Improvement Using Solar PV H-bridge Based Hybrid Multilevel Inverter” Power Electronics (IICPE), 2014 IEEE

[6] A. Sarkar, S.Reddy, B. Das, P.R.Kasari, A.Saha, A. Chakrabarti “Multilevel Inverter based Single Stage Grid Connected Solar PV” , Green Computing and Internet of Things (ICGCIoT), 2015

[7] Fernando L. M. Antunes “Multilevel Inverter Topologies for Stand-Alone PV Systems” , IEEE Transactions on Industrial Electronics (Volume: 55, Issue: 7, July 2008)

[8] AnkurChourasiya, SupriyaTripathi, Nayna Bhargava “Five level hybrid cascaded multilevel inverter harmonic reduced in PWM switching scheme”, IJSRD - International Journal for Scientific Research & Development| Vol. 2, Issue 08, 2014

[9] S. Boobalan; R. Dhanasekaran “Hybrid Topology of Asymmetric Cascaded Multilevel Inverter with Renewable Energy Sources”, 2014 IEEE International Conference on Advanced Communications, Control and Computing Technologies

[10] SourabhRathore, Mukesh Kumar Kirar and S. K Bhardwaj “SIMULATION OF CASCADED H- BRIDGE MULTILEVEL INVERTER USING PD, POD, APOD TECHNIQUES”, Electrical & Computer Engineering: An International Journal (ECIJ) Volume 4, Number 3, September 2015

[11] Julymol Joseph, Arya Pakash, "MODIFIED CASCADED MULTILEVEL INVERTER WITH GA TO REDUCE LINE TO LINE VOLTAGE THD" International Journal Of Electrical Engineering & Technology (IJEET) (2014)
[12] M.S. Sivagamasundari, P.Melba Mary, "A Single Phase Eleven Level Cascaded H-Bridge Multilevel Inverter for Photovoltaic Systems Using Multicarrier Pwm" International Journal of Modern Engineering Research (IJMER) (2012)
[13] R. Mechouma ,B.Azoui ,M.Chaabane, "Three-Phase Grid Connected Inverter for Photovoltaic Systems, a Review" Renewable Energies and Vehicular Technology (REVET), 2012First International Conference on
[14] Renato M.Nakagomi, Ye Zhao, Brad Lehman, "Multi-level converters for three-phase photovoltaic applications" Control and Modeling for Power Electronics (COMPEL), 2010 IEEE 12th Workshop on
[15] L.Pattathurani, Rajat Kumar Dwibedi, Dr.S.S.Dash, "Multilevel Inverter for Solar Power Applications" International Journal of Engineering Development and Research 2017 IJEDR
[16] Mohammad Ahmad, Anil Kumar Jha, Sitaram Jana, Kishore Kumar, "Simulation and performance analysis of a grid connected multilevel inverter considering either battery or solar PV as DC input sources" Computational Intelligence & Communication Technology (CICT), 2017 3rd International Conference on
[17] Anjali Sudarsanan, Roopa R, Sanjana S, "Comparison of Conventional & New Multilevel Inverter Topology" International Journal of Scientific & Engineering Research, Volume 6, Issue 2, February-2015