# STOCK MARKET PREDICTION AND ANALYSIS USING MACHINE LEARNING

Sumedh Kapse[1], Rajan Kelaskar[2], Manojkumar Sahu[3], Rahul Kamble[4]

[1] *Student, PVPPCOE, Computer engineering, PVPPCOE, Maharashtra, India*
[2] *Student, PVPPCOE, Computer engineering, PVPPCOE, Maharashtra, India*
[3] *Student, PVPPCOE, Computer engineering, PVPPCOE, Maharashtra, India*
[4] *Student, PVPPCOE, Computer engineering, PVPPCOE, Maharashtra, India*

## ABSTRACT

*Stock market prediction has always been an interesting research topic among researchers mainly due to its capital gain by trading stocks and or to understand the information hidden in stock market data. Many machine learning algorithms and statistical models have been proposed by researchers for stock price prediction and stock price movement prediction. We have studied various machine learning methods and techniques for stock market prediction. Here we present recent growth in stock market prediction methods and models, perform a comparison among these models to find out the accuracy of the prediction of the stock market values and also figuring out the advantages and disadvantages of these individual models. We are using LSTM and GRU models to predict future stock prices.*

**Keyword: -** *Stock market forecasting, Machine learning, Recurrent neural networks, Long short term memory, Gated recurrent unit, Back propagation.*

---

## 1. INTRODUCTION

Stock market prediction has been one of the most challenging goals of the Artificial Intelligence (AI) research community. This research is meant to go far beyond the capabilities of traditional AI research, which primarily focuses on developing systems that are supposed to emulate human intelligence, because stock market is generally Nonlinear and volatile. The fluctuation rate may depend on many factors: equity, interest rate, security options, warrants merger and ownership of large financial corporations or companies. Still, no one can consistently predict the stock market movement. That is why this of AI prediction requires an iterative process of knowledge discovery and system improvement which can be achieved with various models such as ANN and SVM.

Stock market is a promising financial investment that can generate great wealth. However, the volatile nature of the stock market makes it a very high risk investment. Stock market prediction have always been an important issue in the field of technology, financial and mathematics because of its very likely financial gain. As major amount of capital is traded and exchanged from the stock market, it is considered as highly important investment outlet. Also, the prediction of the stock brings the task of proving if the stock market can be predicted or not, with the huge number of fast computers and tremendous information all over the Internet, stock markets have become more accessible to both the strategic investors and the normal public.

Long Short-Term Memory (LSTM) is one of the most successful RNNs architectures. LSTM introduces the memory cell, a unit of computation that replaces traditional artificial neurons in the hidden layer of a network. With these memory cells, networks are able to effectively associate memories and input remote in time, hence suit to grasp the structure of data dynamically over time with high prediction capacity.

## 2. LITERATURE REVIEW

Stock price prediction using LSTM, RNN and CNN-sliding window model: [3] The experiment was done for three different deep learning models. CNN is giving more accurate results than the other two models. This is due to the reason that CNN does not depend on any previous information for prediction. It uses only the current window for prediction. This enables the model to understand the dynamical changes and patterns occurring in the current

window. However in the case of RNN and LSTM, it uses information from previous lags to predict the future instances.

Stock market prediction using neural network through news on online social networks: [5] In theory, RNNs can make use of the information in arbitrarily long sequences, but in practice they are limited to looking back only a few steps. The vanishing gradient problem prevents standard RNNs from learning long-term dependencies. Gated Recurrent Units (GRUs) were proposed.

Stock market's price movement prediction with LSTM neural networks: [1] The objective of this project is to study the applicability of recurrent neural networks, in particular the LSTM networks, on the problem of stocks market prices movements prediction. Assess their performance in terms of accuracy and other metrics through experiments on top of real life data and analyze if they present any sort of gain in comparison to more traditional machine learning algorithms.

A recurrent neural network approach in predicting daily stock prices an application to the Sri Lankan stock market: [4] Recurrent Neural Networks (RNN) is a sub type of neural networks that use feedback connections. Several types of RNN models are employed in predicting financial time series. This study was conducted in order to develop models to predict daily stock prices of selected listed companies of Colombo Stock Exchange (CSE) based on Recurrent Neural Network (RNN) Approach and to measure the accuracy of the models developed and identify the shortcomings of the models if present.

A LSTM-based method for stock returns prediction: A case study of China stock market: [2] In our LSTM model for stock prediction, one sequence was defined as a sequential collection of the daily dataset of any single stock in a fixed time period (N days). The daily dataset describes the performance of the stock with sequence learning features like closing price, trade volume on one particular day in these N days.

## 3. PREDICTION MODELS

### 3.1 Long short-term memory

Long short-term memory (LSTM) units (or blocks) are a building unit for layers of a recurrent neural network (RNN). The Long Short-Term Memory or LSTM network is a recurrent neural network that is trained using Backpropagation through Time and overcomes the vanishing gradient problem. A common LSTM unit is composed of a cell, an input gate, an output gate and a forget gate. The cell is responsible for "remembering" values over arbitrary time intervals; hence the word "memory" in LSTM. Each of the three gates can be thought of as a "conventional" artificial neuron, as in a multi-layer neural network: that is, they compute an activation of a weighted sum. Intuitively, they can be thought as regulators of the flow of values that goes through the connections of the LSTM; hence the denotation "gate". There are connections between these gates and the cell.

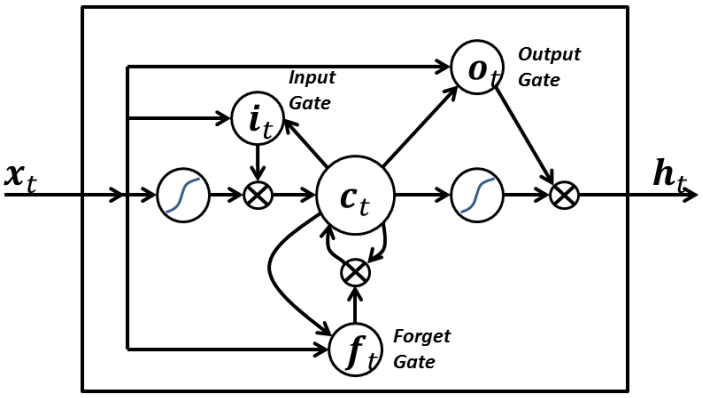


**Fig -1:** Architecture of LSTM

### 3.2 Gated recurrent unit

Gated recurrent units (GRUs) are a gating mechanism in recurrent neural networks, introduced in 2014 by Kyunghyun Cho et al. The GRU operates using a reset gate and an update gate. The reset gate sits between the previous activation and the next candidate activation to forget previous state, and the update gate decides how much of the candidate activation to use in updating the cell state. GRUs have been shown to exhibit better performance on smaller datasets.

The LSTM unit has separate input and forget gates, while the GRU performs both of these operations together via its reset gate. They have fewer parameters than LSTM, as they lack an output gate. There are several variations on the full gated unit, with gating done using the previous hidden state and the bias in various combinations, and a simplified form called minimal gated unit.

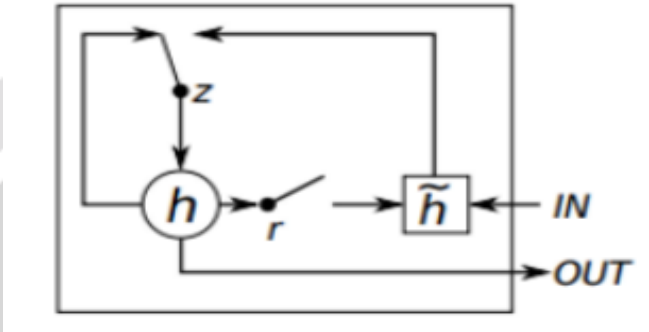


**Fig -2:** Architecture of GRU

## 4. PROPOSED SYSTEM

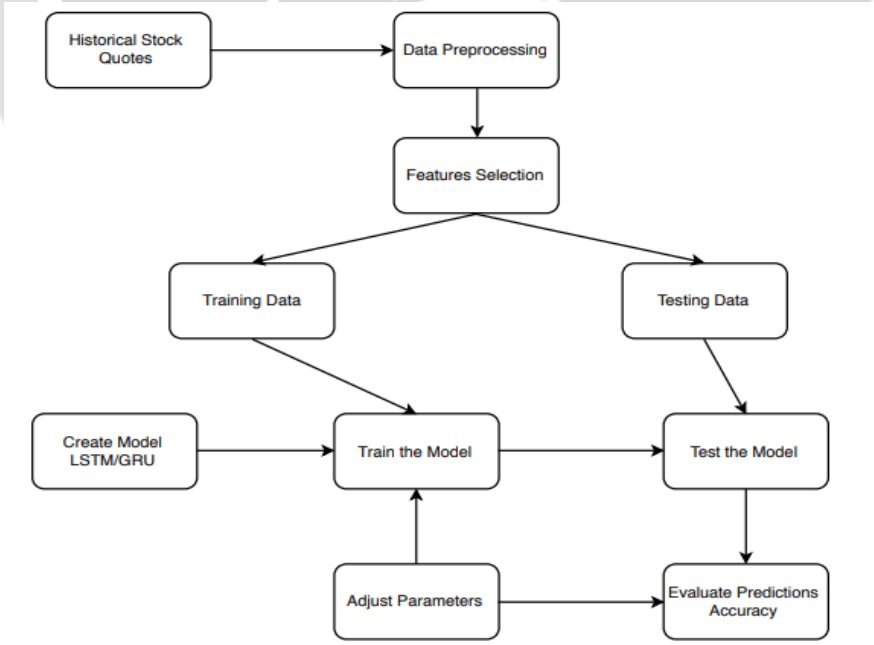


**Fig -3:** Proposed System Architecture

In the process of predicting the future of stock market there needs to be a detailed procedure to follow as described in this figure

• The initial step will be to collect some historical stock data of any firm from yahoo finance that is used for predicting the values of stock prices.
• Then the data collected is preprocessed by using Data scaling and Data discretization techniques.
• In this step, only the features such as Date, open, high, low, close, and volume which are to be fed to the neural network are chosen.
• The historical stock data is divided into training data and testing data, in the ratio of 70:30.
• The data are fed to the recurrent neural network and trained for prediction. Our LSTM model consist of a sequential input layer followed by LSTM layers, dense layer and then finally a dense output layer with linear activation function.
• The output value generated by the output layer of the RNN is compared with the target value. The error between the target and the obtained output value is minimized by using back propagation through time algorithm which adjusts the weights and the biases of the network.

## 5. RESULTS AND DISCUSSIONS

Here we plot the loss value of the training of the dataset, the loss is high during the initial stages of the training, but as the training progresses the loss goes on decreasing, the lower the loss the better will be the prediction.

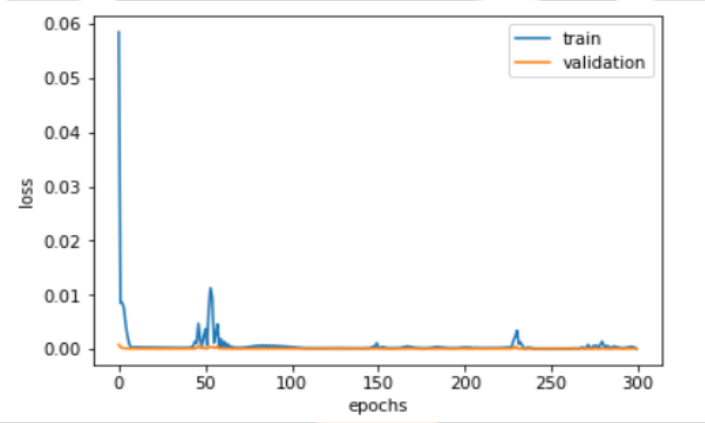


**Fig -4:** Plot of Loss During Training Process

This graph depicts actual and predicted stocks closing price from a particular company, through this system, it is observed that the actual as well as predicted values are both close and produce acceptable testing accuracy.

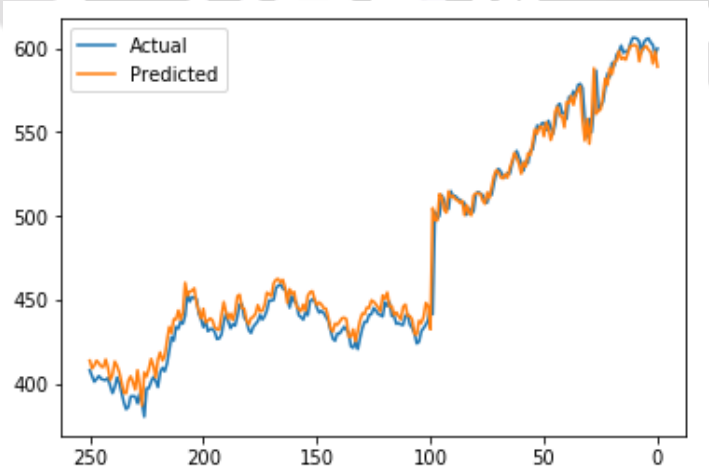


**Fig -5:** Plot Depicting Actual and Predicted Stock Prices

## 6. CONCLUSION

The project titled Stock market prediction and analysis using machine learning is implemented using the machine learning models LSTM and GRU which are modern versions of Recurrent neural networks.
The LSTM and GRU models are trained by feeding past datasets and statistics upon which it has learned and adapted to the pattern and predicted the future stock price value, which is approximate and close to the original value.

## 7. REFERENCES

[1]. M. Q. Nelson, A. C. M. Pereira and R. A. de Oliveira, "Stock market's price movement prediction with LSTM neural networks," 2017 International Joint Conference on Neural Networks (IJCNN), Anchorage, AK, 2017, pp. 1419-1426.

[2]. K. Chen, Y. Zhou and F. Dai, "A LSTM-based method for stock returns prediction: A case study of China stock market," 2015 IEEE International Conference on Big Data (Big Data), Santa Clara, CA, 2015, pp. 2823-2824.

[3]. S. Selvin, R. Vinayakumar, E. A. Gopalakrishnan, V. K. Menon and K. P. Soman, "Stock price prediction using LSTM, RNN and CNN-sliding window model," 2017 International Conference on Advances in Computing, Communications and Informatics (ICACCI), Udupi, 2017, pp. 1643-1647.

[4]. A. J. P. Samarawickrama and T. G. I. Fernando, "A recurrent neural network approach in predicting daily stock prices an application to the Sri Lankan stock market," 2017 IEEE International Conference on Industrial and Information Systems (ICIIS), Peradeniya, 2017, pp. 1-6.

[5]. Chen, W, Zhang, Y, Yeo, C.K., Lau, C.T., Lee, B.S. Stock market prediction using neural network through news on online social networks[C]. Smart Cities Conference (ISC2), 2017 International, 2017: 11-2.