STATIC AND DYNAMIC ANALYSIS OF A COMPOSITE BLOWER USING FEA

C.Naveen Raj[1], N.Praveen kumar[2], DRS Narsing rao[3], G. Shravya[4]

[1] *Assistant professor, Mechanical engineering, Vidya Jyothi Institute of Technology, Telangana, India*
[2] *Assistant professor, Mechanical Engineering, Vidya Jyothi Institute of Technology, Telangana, India*
[3] *Assistant Professor, Mechanical Engineering, Vidya Jyothi Institute of Technology, Telangana, India*
[4] *Assistant Professor, Mechanical Engineering, Vidya Jyothi Institute of Technology , Telangana, India*

ABSTRACT

Centrifugal blowers are used in naval on-board applications have high noise levels. The noise produced by a rotating component is mainly due to random loading force on the blades and periodic iteration of incoming are with the blades of the rotor. The contemporary blades in naval applications are made up of aluminium or steel and generate noise that causes disturbance to the people working near the blower. The present work aims at examining the choice of composites as an alternative to metal for better vibration control. Composites known for their superior damping characteristics are more promising in vibration reduction compared to metals. The modelling of the blower was done by using solid modelling software CATIA V5 R19. It is proposed to design a blower with composite material, analyse its strength and deformation using FEM software. In order to evaluate the effectiveness of composites and metal blower using FEA packaged (ANSYS). Model analysis is performed on both Aluminium and composite blower to find out first 5 natural frequencies.

Keyword: - *centrifugal blower, damping, vibration and composites etc….*

1. INTRODUCTION

A centrifugal fan is a mechanical device for moving air or other gases. The terms "blower" and "squirrel cage fan", (because it looks like a hamster wheel), are frequently used as synonyms. These fans increase the speed and volume of an air stream with the rotating impellers. Centrifugal fans use the kinetic energy of the impellers to increase the volume of the air stream, which in turn moves them against the resistance caused by ducts, dampers and other components. Centrifugal fans displace air radially, changing the direction (typically by 90°) of the airflow. They are sturdy, quiet, reliable, and capable of operating over a wide range of conditions.

Centrifugal fans are constant displacement devices or constant volume devices, meaning that, at a constant fan speed, a centrifugal fan moves a relatively constant volume of air rather than a constant mass. This means that the air velocity in a system is fixed even though the mass flow rate through the fan is not fixed. Centrifugal fans are not positive displacement devices. Centrifugal fans have certain advantages and disadvantages when contrasted with positive-displacement blowers. The centrifugal fan is one of the most widely used fans. Centrifugal fans are by far the most prevalent type of fan used in the HVAC industry today. They are often cheaper than axial fans and simpler in construction. They are used in transporting gas or materials and in ventilation system for buildings. They are also well-suited for industrial processes and air pollution control systems. The centrifugal fan is a drum shape composed of a number of fan blades mounted around a hub. As shown in the animated figure, the hub turns on a driveshaft mounted in bearings in the fan housing. The gas enters from the side of the fan wheel, turns 90 degrees and accelerates due to centrifugal force as it flows over the fan blades and exits the fan housing.

1.1 Application of Centrifugal Blower

Able to generate a substantial volume of air with minimal vibration in a limited space, centrifugal blowers are used in a wide range of air conditioning, ventilation, heating and clean room applications. A centrifugal blower intakes air through its center and directs it through a perpendicular opening in the housing. Unlike many other blowers, this is accomplished through an impeller, which is a vaned disk that increases pressure and flow of gas.

Centrifugal blowers find use in certain automotive applications; a centrifugal supercharger or turbocharger is basically a modified centrifugal blower. The boost generated from the supercharger is based on the speed of the blower, although care should be taken not to exceed the capacity of the engine, as this can lead to engine damage. Generally, when a turbo is not used.
When installing a blower system, take care to include appropriate space for effective maintenance as well as the proper filtration. Manufacturers will provide specifications on the flow rate and pressure capacity, and the cutoff S.P., as well as the horsepower of the unit. Centrifugal blower repair services are also available through select businesses; typically blower repair includes the replacement of seals, rings and other hardware, plus complete performance calibration.

2. LITERATURE SURVEY

Blower has been widely used and one of the well established fluid handling machinery. Survey is done to get information about the research material available for Volute casing of Blower. To get the detailed design, Experimental and Computational Fluid Dynamics investigation to predict the flow in a blower casing, which produces a complex three dimensional phenomenon involving turbulence, secondary flows and unsteadiness. Also, Pressure fluctuation interacts with the Volute casing. This pressure distribution inside the casing is measured with various techniques. The distributions of pressure and efficiency obtained by numerical simulation can be a good agreement with those determine experimentally. Analysis of flow in casing is predicted by using CFD and which is very useful tool in visualizing the flow at various section in volute. It is describe that performance characteristic of blower as a function of the shape, expansion diameter and width of the volute casing. All these can be used to optimize the design of volute casing of blower. Selection of material for the construction of volute casing can lead to cost reduction. To get the complete knowledge of all above factors for the construction of efficient volute casing large survey is required. Literature survey has been divided into the different areas of work done by the researchers as, in the field of geometric parameters of the casing, Experimental work done over the casing and recent work done as per the latest technology and software available to analyze the flow in Volute casing of blower.

2.1 Geometric Parameters

A two-dimensional model of the flow in a vaneless diffuser is represented in figure: 2.1. It represents the spiral vortex path that, traces a streamline from the impeller outlet at point 2 to the casing at point 3.

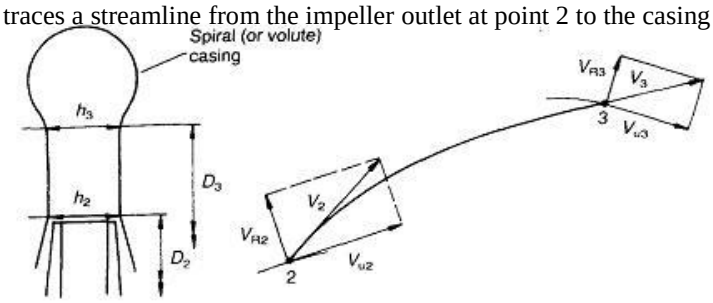

2.2 Volute area

The total flow of the impeller discharge passes through the volute throat area; only part of the impeller capacity passes through any other section. Worster studied the casing and its effect on pump performance and proposed that the most important parameter was the volute throat area. According to Stepanoff if the volute areas are too small in comparison with the optimum values, the peak efficiency will decrease slightly and more towards a lower capacity. When volute area is too large the peak efficiency may increase but will move towards a higher capacity. Efficiency at partial capacities will then be lower.

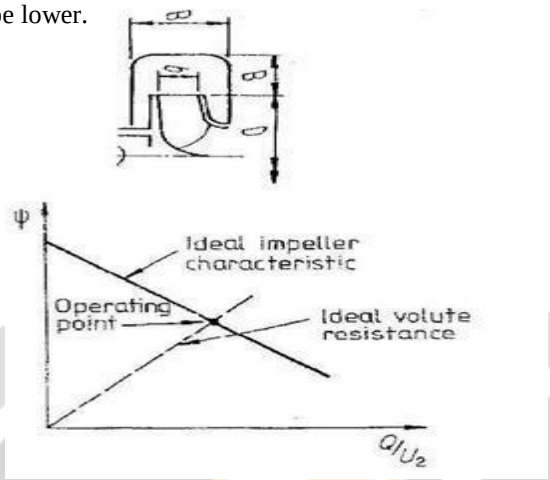

2.3 Scope and Objectives of the Present work

After review of all the above literature it has been found that still much work is required to get the detail study of flow and design of medium range blower casing. Many factors must be considered in its practical design because the flow generated in the blower is quite complicated with three dimensionality and unsteadiness. The fundamental blower performance is primarily determined by the impeller of the blower and is also affected by the casing. However, the theoretically estimation of the effect of the casing on the performance has not been well established. In order to estimate the casing effect on the Blower performance, detailed three-dimensional flow analysis in the casing is necessary.

1) Experimental work is required to gain the knowledge about the three dimensional flow field at various angular, radial, axial locations and near the tongue region in the Volute casing and make the analysis regarding the losses that occurs due to the design of casing in medium range blower with backward curved impeller for which information is not available as per survey. Major work is in the field of compressor but not in the medium range Blower.
2) Experiment is to be carried out with three dimensional calibrated probe connected to a standard manometer for measurement of pressure upto 500mm to 700mm of water and flow direction. To traverse the probe at different angle and position, versatile traversing mechanism is required. The range of movement should be as per the height of the casing. This will lead to accurate and promising tool for measurement.
3) For validation of the readings uncertainty analysis is to be carried out. This is not seen in any Literature survey of the blower.
4) By considering free vortex or constant velocity method for design of casing does not depends on the selection of pressure requirement, as a criterion for design of casing. Therefore, Design of the casing should be identical and uniform for all thetype of impeller. This is required to make uniform design. In Constant velocity design method as per equation 1.2, design is based on constant value Rc which is taken from experimental reference chart. So there should be common design for the casing which satisfies the end user as per pressure requirement.
5) Design of the blower casing should be optimized to get various range of efficiency with considering various parameters. There are many constraints to be satisfied in optimization, which is not done until now. This is very important now days, as to save power and cost.
6) As per the industrial need consumption of the power is to be reduced and blower should be operated as per requirement in the system. So, by application of variable speed drive in the system the performance of the casing getting affected is to be studied.

7) As there is no information regarding mismatching of impeller in the casing. What should be the range for fitting the impeller in the casing, if the casing is designed as per impeller having outlet blade 400 and we want to operate the blower by fitting the impeller with 700. So with this condition what will be the effect on the system? This information can be economical to an industry.
8) There is no information regarding use of Volute Casing as suction to another Blower system, which can be used for application involving filtration and collect the smoke from the surrounding.
9) To validate theoretically the flow in the casing of the blower, CFD analysis is required. It is observed in high pressure compressor but not in medium range blower. This can save the experimental cost and time. The results of CFD are more explanatory. So, in medium range blower casing it will help in analysis for change in cross section and selection of material for fabrication.

All above short comings can help in better design and understanding of the flow in volute casing of the blower. So, problem formation is divided in to three main parts, experimental work, design part and CFD work. To investigate the flow in volute casing of the blower, experimental setup is planned by using existing motor having 7.5hp (5.5kw) at rotational speed of 2900r.p.m. and impeller of backward straight blade with inlet blade angle 200 and outlet blade angle 480 with tangential direction having thickness of the blade 5mm, inner and outer diameter 300mm and 425mm and number of blades 12. With these existing impeller casing is to be designed by both method of "Free Vortex‖ and "Constant Mean Velocity" by considering the volute width 260mm, twice the impeller width. Flow in this casing is to be measured with help of five-hole probe made of s.s material having tubes of 1mm diameter, outer tube of 6.5mm and length of 800mm.

For mismatching of impeller in the above casing, impeller is to be designed having forward curved blade with inlet blade angle 200 , utlet blade angle 1200, blade thickness 5mm, inner diameter 300mm, outer diameter 425mm and number of blades 12 and measurement is to be done with the help of calibrated five-hole probe. To check the validity of the Experimental results Uncertainty analysis is to be done. After the experimental performance CFD analysis is to be planned with the all above conditions and also static and dynamic analysis should be done in ANSYS. After the experimental and CFD analysis, design will be optimized with objective of increasing the efficiency of the system. Considering the various Independent variables such as β2, Z, d1, b1 and b2 and satisfying the constraints such as Veye < 22 m/s, d1 / d2 = 0.5 to 0.8, (d1/d2) / (1.194*φ1/3) = 1 to 1.1, b1/d1 = 0.208 to 0.46, b2 < b1 and divergence angle < 12°, β1 = 15° to 35°, Vm1/Vm2 = 1.25 to 1.6, W1/W2 > 1.05. Effect of this optimization is to be analyzed by considering two methods such as Genetic Algorithm method and combined heuristic method. Results of this optimization will be validate by performing the experimental setup with the optimized design of the casing having backward inclined impeller with inlet angle of 30.410 and outlet angle of 70.620 with tangential direction, thickness of 2mm, inner diameter of 100mm, outer diameter of 260mm having number of blade 10 and volute will be fabricated from 2mm thickness ms sheet and width twice the impeller width. This defined problem of Investigation of flow inside the casing will leads to the improvement of Blower performance.

3. RESULTS AND DISCUSSIONS

The deformation of aluminium blower is shown in figure 5.1 and the maximum deflection was found as 0.0914 mm. The maximum normal stress obtained is 3.483 N/mm2 . The stress and displacements are shown in figures 5.2 to 5.5. Table 5.1 shows induced deformations and stresses in aluminium blower.

Static analysis results of aluminium blower:

Aluminium Blower	Results

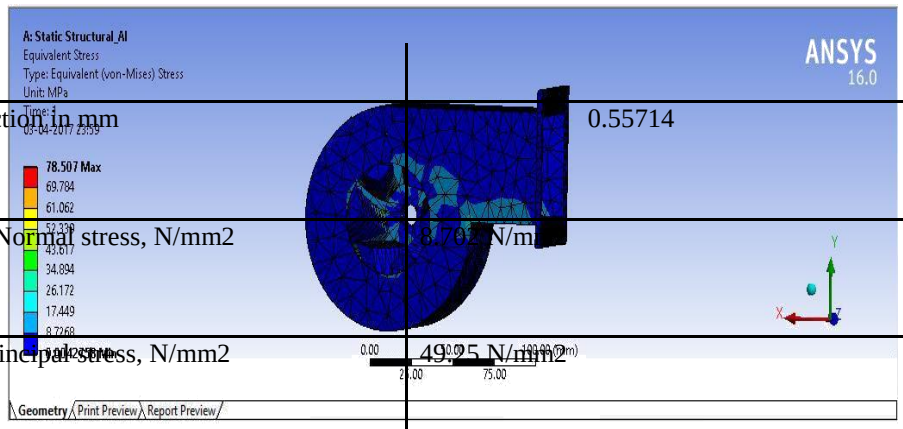

Deflection in mm	0.55714
Max. Normal stress, N/mm2	78.702 N/mm2
1 st principal stress, N/mm2	49.25 N/mm2
2 nd principal stress, N/mm2	15.94 N/mm2
3 rd principal stress, N/mm2	7.52 N/mm2

The maximum deflection induced in metallic blower is 0.0914 mm , which is in safe limits. Hence based on rigidity the design is safe. The maximum induced stress is 13 Mpa which is less than the allowable stress (160 Mpa).Hence the design is safe based on strength.

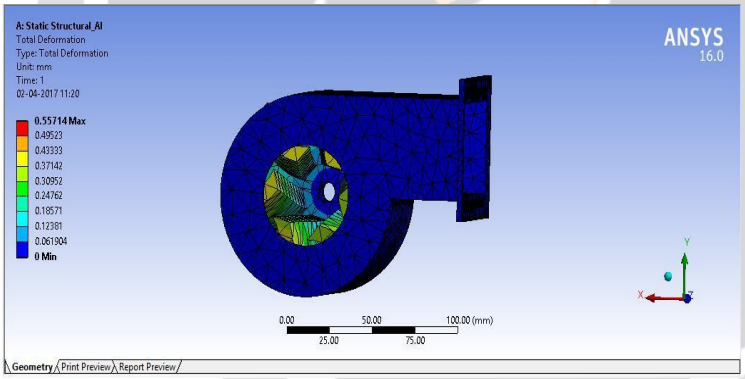

Total deformation of Aluminium Blower

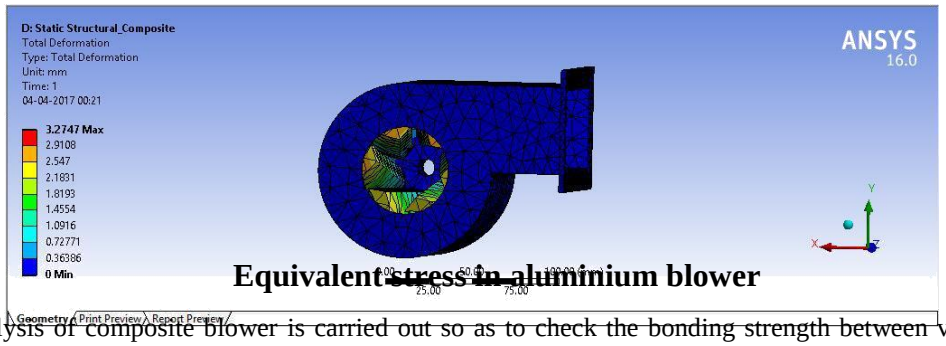

Equivalent stress in aluminium blower

Static analysis of composite blower is carried out so as to check the bonding strength between various layers of composite blower and Inter-laminar shear stresses are calculated. Maximum deflection for composite blower with 27 layers was found to be 1.018 mm as shown in figure 8.6. The maximum normal stress was found to be 4.534 N/mm2 in z-direction as shown in figure 8.7 and the maximum inter-laminar shear stress as 8.669 N/mm2 and is shown in figure 8.8. Table 8.2 shows induced deformations and stresses in composite blower. The deflection for composite blower was found to be around 1.018 mm for all layers which is more than that of Aluminium blower i.e. 0.0914mm.Interlaminar shear stresses were calculated for composite blower for 27 layers and the maximum inter laminar shear stress is found on the layer 27.

static analysis results of composite blower:

Composite blower (27 layers)	**Results**
Max deflection in mm	3.2747mm
Max. normal stress, N/mm2	4.534 N/mm2
Maximum Inter-laminar shear stress, N/mm2	8.669 N/mm2

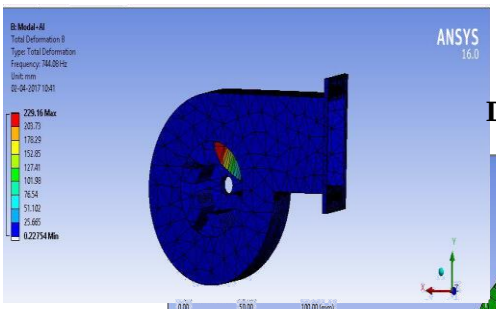

Deformation of Composite Blower

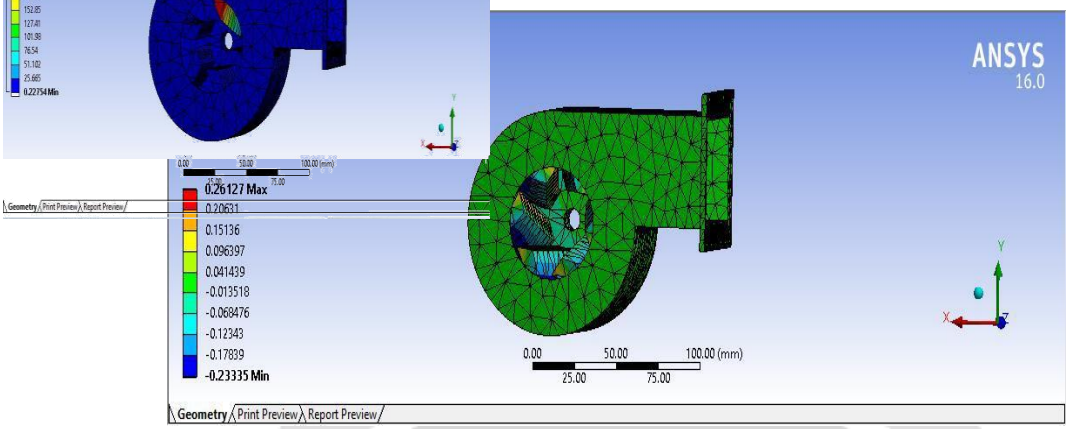

Stress of Composite Blower in Z-direction

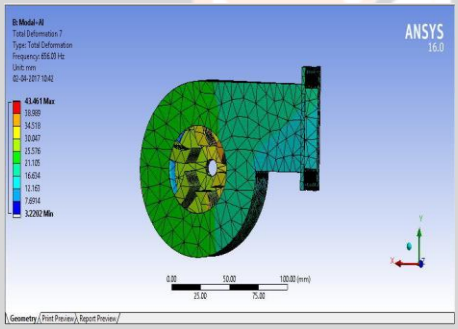

First mode shape of aluminium blower

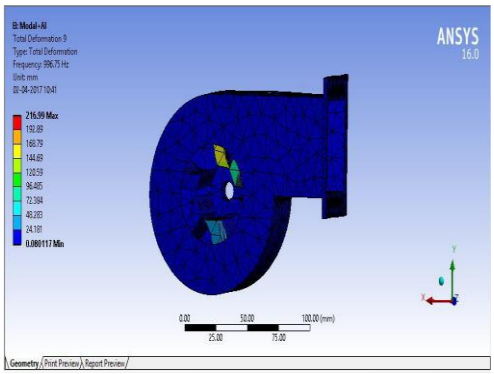

Second mode shape of aluminium blower

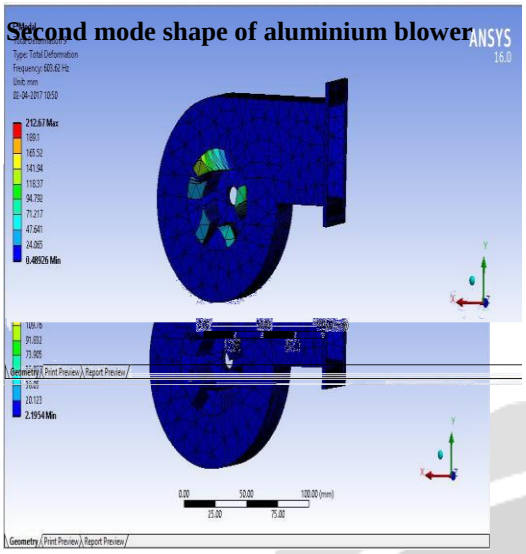

third mode shape of aluminium blower

Fourth mode shape of aluminium blower

fifth mode shape of aluminium blower

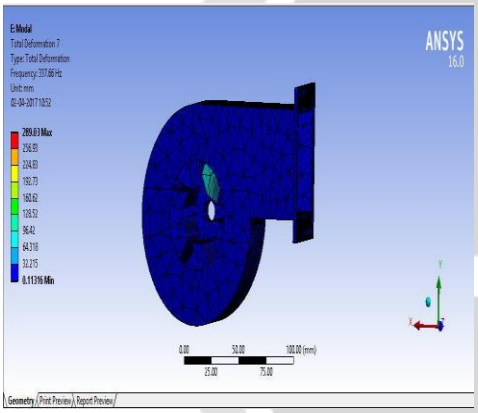

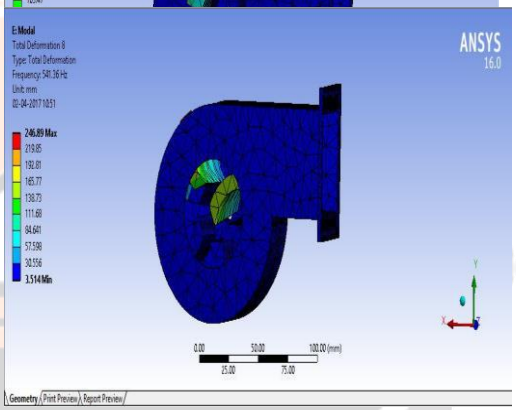

First mode shape of composite blower

second mode shape of composite blower

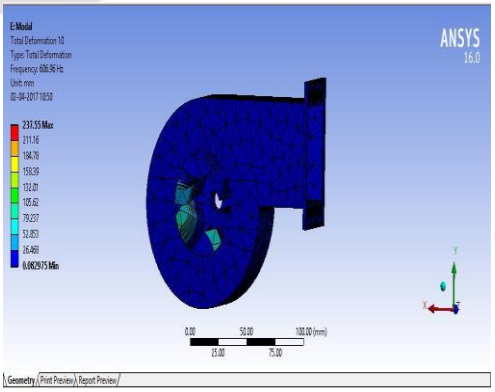

Third mode shape of composite blower **fourth mode shape of composite blower**

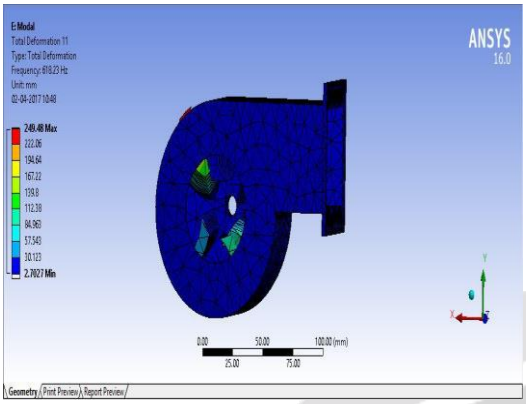

Fifth mode shape of composite blower

No. of modes	Natural frequencies of Aluminum blower in Hz	Natural frequencies of Composite blower in Hz	%Variation
1	**656.03**	**337.66**	**64.24**
2	**744.08**	**541.36**	**31.59**
3	**996.75**	**603.62**	**49.15**
4	**1093.7**	**606.96**	**46.71**
5	**1108.8**	**618.23**	**46.98**

FIGURE 7
Model (A4, B4, C4) > Harmonic Response (C5) > Solution (C6) > Frequency Response

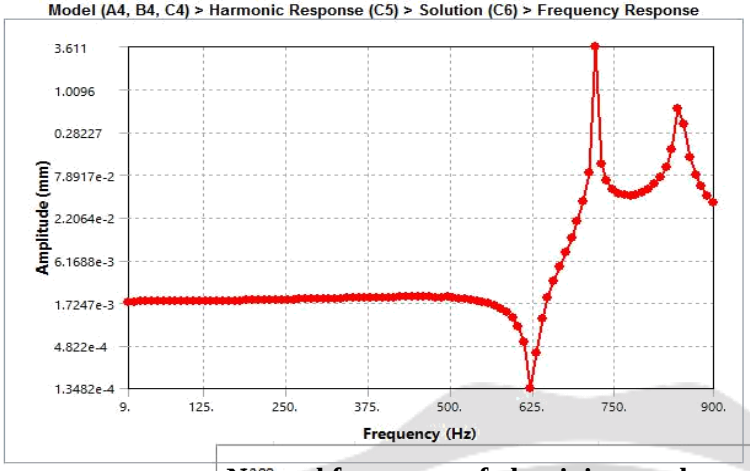

Natural frequency of aluminium and composite blower

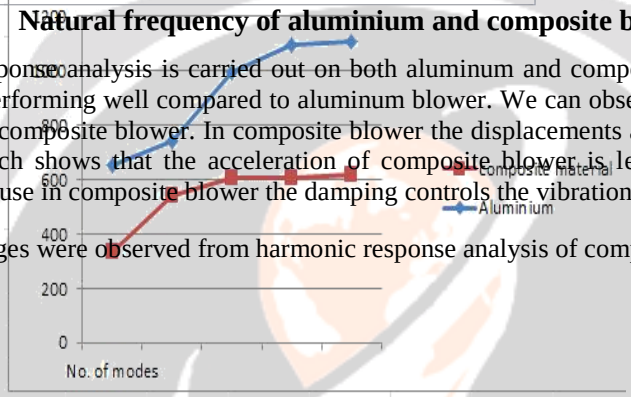

Harmonic response analysis is carried out on both aluminum and composite blower; it was observed that composite blower is performing well compared to aluminum blower. We can observe peaks at the natural frequency in both aluminum and composite blower. In composite blower the displacements are reduced when compared to the aluminum blower which shows that the acceleration of composite blower is less that causes lesser vibration in composite blower because in composite blower the damping controls the vibrations.

The following advantages were observed from harmonic response analysis of composite blower over

Aluminium blower:

1. Vibration levels are less in composite blower compared to aluminium at higher frequency range.

2. The maximum displacements are lesser in composite blower than aluminium.

3. The mass of the composite blower is much less than aluminium.

X-Component of displacement versus frequency response graph of aluminium blower

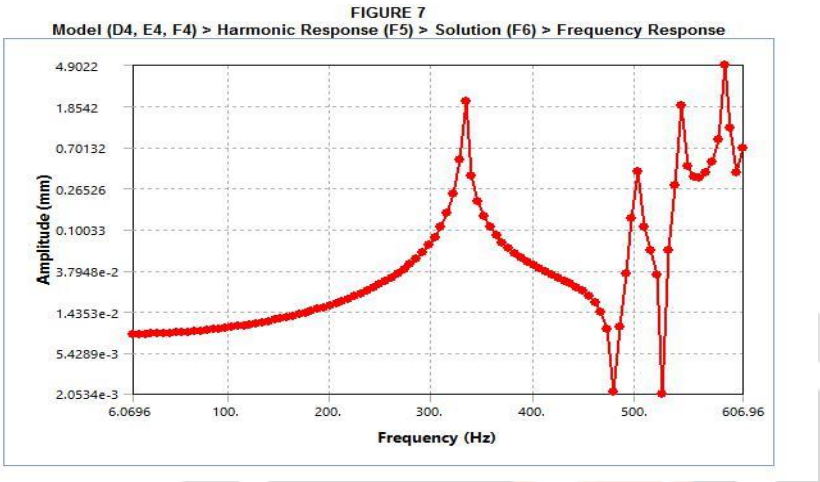

X-Component of displacement versus frequency response graph of composite blower

4. CONCLUSIONS

The following conclusions are drawn from the present work

1. The stresses of composite blower obtained in static analysis 4.534 N/mm2 are within the allowable stress limits.
2. The natural frequency of composite blower is reduced because of high stiffness and the lay up sequence in the blower.
3. The weight of the Composite blower is 15 kg which is less than the aluminum blower with a weight of 20 kg.
4. From the results of harmonic analysis, damping effect is more in composite blower which controls the vibration levels.

5. REFERENCES

1. Huang Chen-Kang and Hsieh Mu-En, ―Performance analysis and optimized design of Backward curved airfoil centrifugal blowers‖, American society of Heating, Refrigerating and Air Conditioning.

2. Prezelj Jurij and Carudina Mirko, ―Identification of noise sources in centrifugal blower with acoustic camera‖, The Journal of Acoustical Society of America, Volume 123, Number 5, p. 3824, May 2008.

3. J.B. Moreland, ―Housing effect on centrifugal blower noise‖, Journal of Sound and Vibratio n, International Journal of Engineering Research & Technology (IJERT) Vol. 1 Issue 8, October - 2012 ISSN: 2278-0181 www.ijert.org 9 IJERT Volume 36, Number 2, pp. 191-205,22 September 1974.

4. G. H. Koopmann and W. Neise, ―The use of Resonators to silence centrifugal blower‖, Journal of Sound and Vibration, Volume 82, Number 1, pp. 17-27, 8 May 1982.