To study the aspects of advanced Solar Lighting system using Instinctive Tracking

Mr. Vikram Bagal [1], Prof J. S .Shitole[2],

[1]Department Of Mechanical Engineering,Savitribai phule pune University,India.

Dattakala Group of Institutions, Faculty of Engineering, Bhigwan India.

[2]J.S.shitole
Dattakala Group of Institutions, Faculty of Engineering, Bhigwan, India

Abstract

Electric power production using solar energy is a gifted alternative technology for the electricity production in the future because of nonmoving or mechanical elements, low operation and maintenance costs or their elongated lifetime. The new research covers decent pathway for reaching more efficient and competitive renewable energy source. In the paper are presented the newest developments in technology, finances and process. The combined applications of thermoelectric generators with heat packing and photovoltaics shows nowadays an economically feasible key to low efficiency of thermoelectric technology.

Keywords— *Thermoelectric generator; concentrator; TEG; STEG; CSTEG; solar energy, efficiency*

1. INTRODUCTION

Former Present president of India Dr.APJ Abdul Kalam, Present President Mr. Pranav Mukharji and Prime Minister Dr. Manmohan Singh giving the more intention on developing the renewable energy sources and utilization of the same in different applications. The domestic, industrial and commercial also.

The main reason to giving pressure on developing the renewable or nonconventional energy sources is to reduce the fossil fuel cost. The fossil fuels are like wood, crude oil, natural gases etc. The wood is a very consumable type of fuel in India hence reducing the jungle and trees. Due to this the pollution is increased and rains falling also reduced. The fossil fuels are not fulfilling the needs of energy of India and the use is very vast in India due to the huge population. The cost of fuel like crude oil and natural gases are depends on the US currency hence the prices these fuels are always variable in the world markets we hear, read and watch the prices of these fuels are increasing day by day .Our country is big and the use of fuel is also increasing day by day very large part of economy is spent on fuel in a year. Almost 35% price of total economy of India is spent on fuel in India which is approximately near to the total price of total economy spent on the food per year. Hence as we develops the utilization of natural sources like wind, water and sunrays. The price spent on fuel is decreased and it can participate the economic development of India definitely. The machine Power jack which is working on solar cell.

We are making the Solar Water Pumping Systems**.**The main aim is to introduce the use of nonconventional energy source. If you need to supply water beyond the reach of power lines, then solar power can solve the problem. Photovoltaic powered pumps provide a welcome alternative to fuel-burning engines, windmills, and hand pumps. Thousands of solar pumps are working throughout the world. They produce best during sunny weather, when the need for water is greatest.

2. LITERATURE SURVEY

Almost 70% of India's population depends on agriculture either directly or indirectly. While 44% of the 140 million sown hectares depend on irrigation, the rest relies on the monsoons. Irrigation, therefore, is essential for good crop yield. Most electrical consumption in this sector goes towards operating pump sets for irrigation. In 2006–7, India's agricultural sector accounted for 22% of the total electricity consumption, up from 10% in the 1970s. There are about 21 million irrigation pump sets in India, of which about 9 million are run on diesel and the rest are grid-based. Grid electricity for agriculture in India is provided at very low tariffs – in most cases, flat rates are charged based on the ratings of the pump. This is largely due to logistical difficulties faced with metering and charge collection. But this practice of providing electricity to farmers at highly subsidized rates has led to increasingly high consumption patterns and widespread use of inefficient pumps across the nation. Also, pumps of lower ratings are used to power applications requiring higher power. These factors, among others, have led to an invidious irrigation–energy nexus. Apart from this, limited and unreliable supply of grid electricity has led to farmers' extensive dependence on diesel for water pumping. In addressing this challenge, the efforts of the Gujarat government are noteworthy. Theyintroduced the Jyotigram Yojana, a programmed that seeks to provide a reliable supply of power for agricultural and domestic purposes in rural areas.

The MNRE has a programmed for the deployment of various solar PV applications, including water pumping systems. However, the deployment has been sparse thus far, with only 7,334 solar PV water pumps having been installed across the country as of March 2010.Water demand for irrigation is correlated to bright sunny days. Hence, solar-based pumps make sense. Even so, small buffer storage might be needed to replace diesel satisfactorily. A solar PV water pumping system consists of a PV array, motor pump and power conditioning equipment, if needed. The power conditioning equipment is used to stabilize the fluctuating electrical energy output of the array. Depending on the total dynamic head and the required flow rate of water, the pumping system can either be on the surface or submersible and the motor can run on either alternating current (AC) or direct current (DC). For AC pumping systems an inverter is required. Ratings of pump sets are chosen depending on the water requirements, size of field, total dynamic head, type of irrigation (drip irrigation, use of sprinklers), etc.

3. DESIGN AND PROCESS SHEET

Specifications:

Solar Panel:

Max Power- 10W, Open C/N voltage- 17.6V, Short circuit current- 0.57Amp, Max power voltage- 22.2 V

Max Power current- 0.62 Amp, Max operating cell temp- 47+/-2Max system voltage- 715vdcump:

Pump:

Input: 160-230 V/50Hz, AC Power: 12W, H-max-1.5m, Output: 780L/HR

Battery:

Lead-acid type rechargeable battery Battery 12V, 7.2 amph, Stepper motor: 12V, 3.5 rpm Torque 8-10 N-m Inverter: 12V, 7.2 amph battery 50 watt power 6-7 hr backup.

4. Calculation:

Support Reaction:

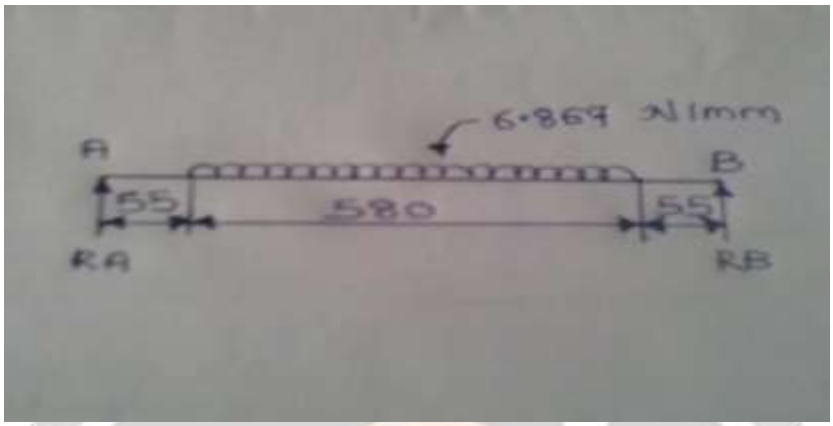

Fig no.1 Support Reaction

Here,

MA = Moment at point A
RA = Reaction at support A
RB = Reaction at support B
FY = Vertical force on shaft

Summation MA=0

-RB × 690 + 6.867 × 580 × {(580/2) + 55} = 0

-690RB + 1374086.7 = 0RB = 1991.43 N

Summation FY = 0

RA + RB – 6.867 × 580 = 0RA = 1991.43 N
From Specification Torque on stepper motor,T = 10 N-m
N = 3.5 rpm

$$Power\ (P) = \frac{2\pi NT}{60}$$

$$Power\ (P) = \frac{2 * \pi * 3.5 * 10}{60}$$

= 3.667×10-3 Kw

= 3.667 W

5. Drawing

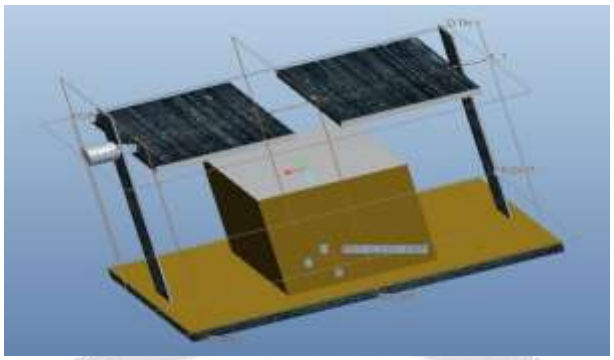

Fig no.2 Drawing

6. CONSTRUCTION

Components of Project:

Our project consists of following component

- Solar Panel, Battery, Pump, LDR, Stepper motor, Inverter, Microcontroller
- Circuit diagramCircuit diagram:

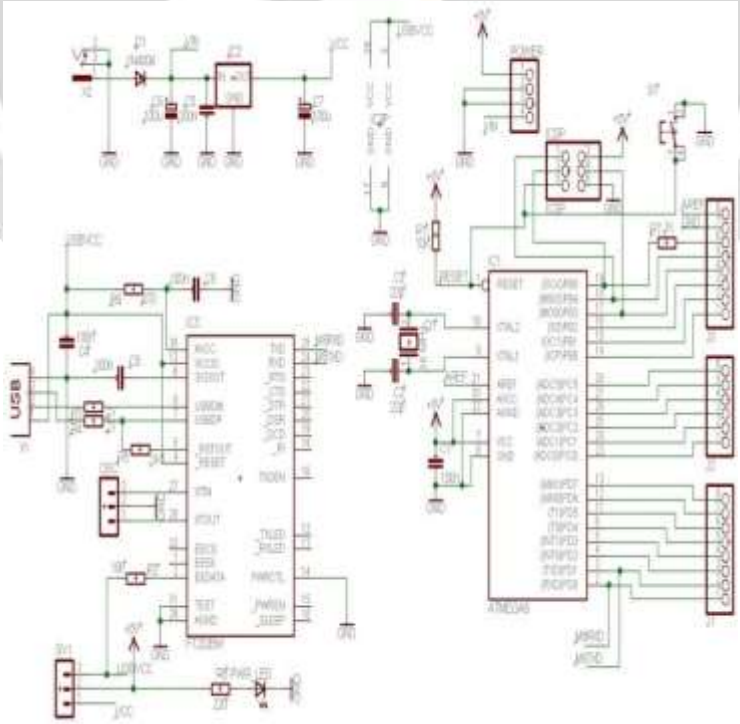

Fig no.3Circuit diagram:

7. WORKING

Our working principle is based on two concepts:

1.Solar tracking
2.Pumping

7.1 Solar tracking:

In this project we will also be using the concept of solar tracking. A solar tracker is a device for orienting a solar panel or concentrating solar reflectors or lens towards the sun. The sun's position in the sky varies as the sun moves across the sky. In flat-panel photovoltaic (PV) applications, trackers are used to minimize the angle of incidence between the incoming sunlight and a photovoltaic panel. This increases the amount of energy produced from a fixed amount of installed power generating capacity. An intelligent microcontroller-based circuit will be used to monitor the sun's position in the sky and it will accordingly move the panels so that the panels are perpendicular to the sun rays so we get maximum efficiency

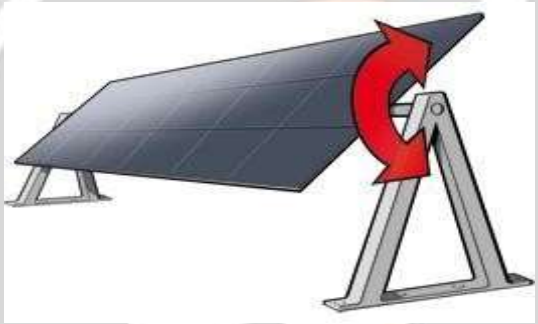

Fig no.4 solar tracking

7.2 Water pumping:

Photovoltaic (PV) panels produce electricity from sunlight using silicon cells, with no moving parts. They have been mass-produced since 1979. They are so reliable that most manufacturers give a 10-year warranty, and a life expectancy beyond 20 years. They work well in cold or hot weather. Solar water pumps are specially designed to utilize DC electric power from photovoltaic panels. They must work during low lightconditions at reduced power, without stalling or overheating. Low volume pumps use positive displacement (volumetric) mechanisms which seal water in cavities and force it upward. Lift capacity is maintained even while pumping slowly. These mechanisms include diaphragm, vane and piston pumps. These differ from a conventional centrifugal pump that needs to spin fast to work efficiently. Centrifugal pumps are used where higher volumes are required.

A surface pump is one that is mounted at ground level. A submersible pump is one that is lowered into the water. Most deep wells use submersible pumps. A pump controller (current booster) is an electronic device used with most solar pumps. It acts like an automatic transmission, helping the pump to startand not to stall in weak sunlight. A solar tracker may be used to tilt the PV array as the sun moves across the sky. This increases daily energy gain by as much as 55%. With more hours of peak sun, a smaller pump andpower system may be used, thus reducing overall cost. Tracking works best in clear sunny weather. It is less effective in cloudy climates and on short winter days.

Fig no.5 Solar open well submersible pumping system

Storage is important. Three to ten days' storage may be required, depending on climate and water usage. Most systems use water storage rather than batteries, for simplicity and economy. A float switch can turn the pump off when the water tank fills, to prevent overflow. Compared with windmills, solar pumps are less expensive, and much easier to install and maintain. They provide a more consistent supply of water. They can be installed in valleys and wooded areas where wind exposure is poor. A PV array may be placed some distance away from the pump itself, even several hundred feet (100 m) away.

Table No1 Readings (Time Vs Voltage)

PERIOD	VOLTAGE
9:30 TO 10:30 AM	1.3 V
10:30 TO 11:30 AM	2.8 V
11:30 AM TO 12:30 PM	4.3 V
12:30 TO 1:30 PM	5.8 V
1:30 TO 2:30 PM	7.3 V
2:30 TO 3:30 PM	8.8 V
3:30 TO 4:30 PM	10.3 V
4:30 TO 5:30 PM	11.8 V

We are use two solar panel each panel is HAVING power 10 watt. So we connect both panels in series. it gives 20watt powerthat's why battery charge by 1 amp/hr(pure sunlight).From this reading we can say that near about 8 hrs are required to fully charge battery. And from fully charged 12 v battery 10w capacitypump has worked about 4-5 hour.

8. CONCLUSION

Since the increase in price per increase in unit power output of a photovoltaic system is greater than that for a diesel, gasoline, or electric system, photovoltaic power is more cost competitive when the irrigation system with which it operates has a low totaldynamic head. For this reason, photovoltaic power is more cost- competitive when used to power a micro irrigation system as compared to an overhead sprinkler system. Photovoltaic power for irrigation is cost-competitive with traditional energy sources for small, remote applications, if the total system design and utilization timing is carefully considered and organized to use the solar energy as efficiently as possible. In the future, when the prices of fossil fuels rise and the economic advantages of mass production reduce the peak watt cost of the photovoltaic cell, power will be cheaper and more common.

REFERENCES

[1] D. Champier, "Thermoelectric generators: A review of applications," Energy Convers. Manag., vol. 140, 2017, pp. 167–181.

[2] D. Kraemer et al., "Concentrating solar thermoelectric generators with a peak efficiency of 7.4%," Nat. Energy, vol. 1, 2016, p. 16153.

[3] IRENA, "Renewable Energy Technologies Cost Analysis Series: Concentrating Solar Power," Compr. Renew. Energy, vol. 3, no. 2, 2012, pp. 595–636.

[4] J. Spelling, A. Gallo, M. Romero, and J. Gonzalez-Aguilar, "A High- efficiency Solar Thermal Power Plant using a Dense Particle Suspension as the Heat Transfer Fluid," Energy Procedia, vol. 69, 2015, pp. 1160–1170.

[5] B. P. Rand, J. Genoe, P. Heremans, and J. Poortmans, "Solar Cells Utilizing Small Molecular Weight Organic Semiconductors," Prog. Photovolt Res. Appl., vol. 15, no. February 2013, pp. 659–676.

[6] U. S. Energy Information Agency, "Levelized Cost and Levelized Avoided Cost of New Generation Resources in the Annual Energy Outlook 2014," Levelized Cost Levelized Avoid. Cost New Gener. Resour. Annu. Energy Outlook 2014., no. April, pp. 1–12.

[7] M. L. Olsen et al., "A high-temperature, high-efficiency solar thermoelectric generator prototype," Energy Procedia, vol. 49, 2013, pp. 1460–1469.

[8] M. L. Olsen et al., "Solar thermoelectricity via advanced latent heat storage," AIP Conf. Proc., 2016, vol. 1734.

[9] P. Huen and W. A. Daoud, "Advances in hybrid solar photovoltaic and thermoelectric generators," Renew. Sustain. Energy Rev., vol. 72, 2017, pp. 1295–1302.

[10] W. G. J. H. M. van Sark, "Feasibility of photovoltaic - Thermoelectric hybrid modules," Appl. Energy, vol. 88, no. 8, 2011,pp. 2785–2790.

[11] A. Sharma, V. V. Tyagi, C. R. Chen, and D. Buddhi, "Review on thermal energy storage with phase change materials and applications," Renew. Sustain. Energy Rev., vol. 13, no. 2, pp. 318–345, 2009.

[12] K. Pielichowska and K. Pielichowski, "Phase change materials for thermal energy storage," Prog. Mater. Sci., vol. 65, pp. 67–123, 2014.